## Location of Proposed Project

**1630 W Campbell Ave**

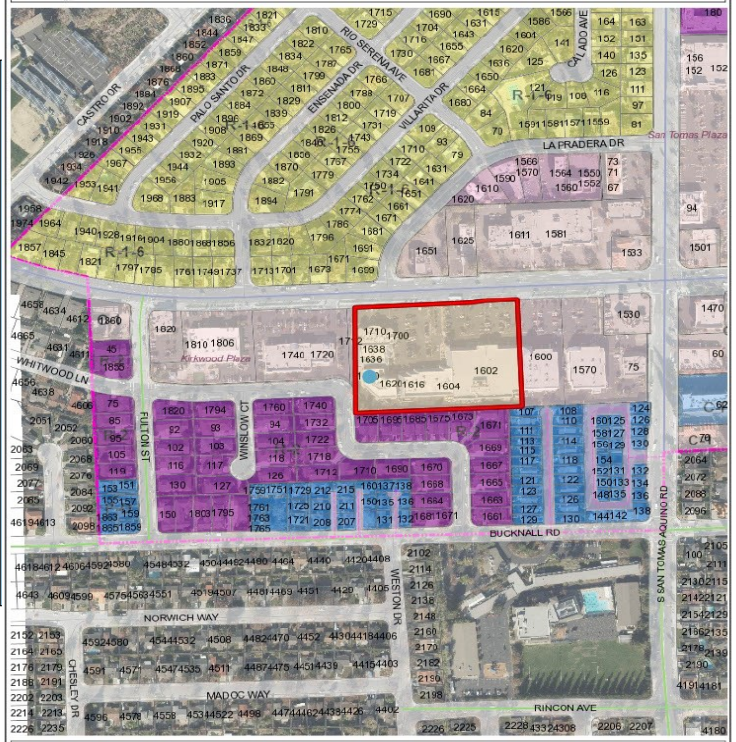


City of Campbell
70 North First Street
Campbell, CA 95008 –1423

## Project Image

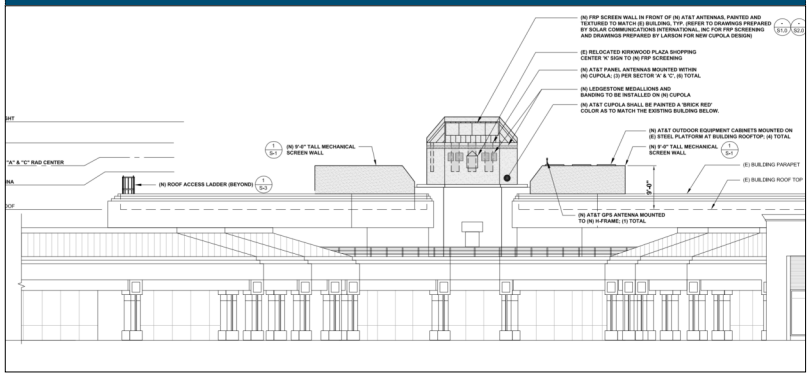

# Courtesy Notice

**Dear Campbell Resident,** **March 7, 2023**

**We are notifying you that the Planning Division of the Community Development Department of the City of Campbell has received an application for the following project:**

**Project Address:** 1630 W Campbell Ave

**Zoning | Area Plan:** C-1| N/A

**Neighborhood Association(s):** N/A

**Council District:** 4

**File No.:** PLN-2023-34

**APN:** 403-02-049

**Applicant:** Carl Jones c/o ATT&T

**Property Owner:** John Kirkorian

**Application Type:** Conditional Use Permit

**Project Planner:** Larissa Lomen, Assistant Planner

**Email Contact**: larissal@campbellca.gov

**Phone Contact:** (408) 866-2144

**Project Description:**

To allow a concealed wireless facility within a new cupola atop an existing multi-tenant commercial building in an existing shopping center.

If you would like to find out more information regarding the proposed project, please view the project plans using the QR code below or contact the Project Planner. The City will send you another notice before the City makes a decision regarding approval of the project.

Before a decision is reached you will receive a formal notice providing another opportunity for public comment.

**- City of Campbell -**
**Community Development Department**
**70 N. First Street, Campbell CA 95008**
**(408)866-2140 I planning@campbellca.gov**

**Note: Applications may change after initial application submittal. To view the project plans, please scan the QR code.**

****Asistencia en Español disponible,**

**Simplemente marque (408) 866-2140 y pida traduccion en Español**

# SITE NUMBER: CCL01280
# SITE NAME: KIRKWOOD PLAZA SHOPPING CENTER
# SITE TYPE: ROOFTOP

**1630 W CAMPBELL AVE., CAMPBELL, CA 95008**
**JURISDICTION: CITY OF CAMPBELL APN: 403-02-049**

**PACE ID:** MRSFR055462
**PTN:** 3701A0LGAH
**USID:** 266469
**FA:** 13334607
**RFDS VERSION: 4.0 RFDS DATE: 12/14/2021 RFDS ID: 4056839**

## PROJECT DESCRIPTION

AT&T WIRELESS PROPOSES TO CONSTRUCT AN UNMANNED TELECOMMUNICATIONS FACILITY. THE SCOPE WILL CONSIST OF THE FOLLOWING:

- REMOVE AND REPLACE EXISTING MECHANICAL SCREEN WALL HEIGHT
- REPLACE (1) EXISTING ROOF TOP SKY LIGHT CUPOLA
- INSTALL (1) NEW AT&T BATTERY CABINET @ BUILDING ROOF TOP
- INSTALL (1) NEW AT&T 512 POWER CABINET @ BUILDING ROOF TOP
- INSTALL (2) NEW AT&T PURCELL CABINETS STACKED @ BUILDING ROOF TOP
- INSTALL (9) NEW AT&T PANEL ANTENNAS
- INSTALL (18) NEW AT&T RRUS @ ANTENNA LEVEL - (15) NEW & (3) FUTURE
- INSTALL (3) NEW AT&T DC-SURGE SUPPRESSORS @ ANTENNA LEVEL
- INSTALL (1) NEW AT&T GPS UNIT MOUNTED ON NEW BATTERY CABINET
- INSTALL (3) NEW AT&T FIBER TRUNK, (1) PER DC-9
- INSTALL (9) NEW AT&T DC POWER TRUNK, (3) PER DC-9
- INSTALL (1) NEW AT&T CIENA BOX MOUNTED ON MODIFIED SCREEN WALL
- INSTALL (1) NEW AT&T DC50 BOX MOUNTED ON MODIFIED SCREEN WALL
- INSTALL (1) NEW ROOF ACCESS LADDER WITH CAGE GUARD

NOTE:
- RF EQUIPMENT IS SHOWN IN CHART ON A-3.
- EPIC WIRELESS TO ENGAGE SPRINKLER MODIFICATION EXTENSION TO OCCUR AT THE NEW COPULA DURING BUILDING PERMIT PHASE.
- NEW BATTERY CABINET LOCATED AT ROOFTOP EQUIPMENT AREA TO HOUSE NEW VALVE REGULATED LEAD ACID (VRLA) BATTERIES.
- CONTRACTOR CONTACT INFORMATION POSTING: THE PROJECT SITE SHALL BE POSTED WITH THE NAME AND CONTACT NUMBER OF THE LEAD CONTRACTOR IN A LOCATION VISIBLE FROM THE PUBLIC STREET PRIOR TO THE ISSUANCE OF BUILDING PERMITS. THE CONTRACTOR CONTACT INFORMATION POSTING SHALL BE REMOVED UPON PROJECT COMPLETION (BUILDING PERMIT FINAL).

## PROJECT INFORMATION

SITE NAME: KIRKWOOD PLAZA SHOPPING CENTER

SITE NUMBER: CCL01280

SEARCH RING: ---

FA# 13334607

SITE ADDRESS: 1630 W CAMPBELL AVE., CAMPBELL, CA 95008

ASSESSOR'S PARCEL NO.: 403-02-049

COUNTY: SANTA CLARA

NEW USE: UNMANNED OUTDOOR TELECOMMUNICATIONS FACILITY

ZONING JURISDICTION: CITY OF CAMPBELL

LATITUDE: 37° 17' 6.27" N (37.285075)

LONGITUDE: -121° 58' 47.2836" W (-121.979801)

GROUND ELEVATION: ±233'

ZONING CLASSIFICATION: C1

TYPE OF CONSTRUCTION: I-B

OCCUPANCY GROUP: U

PROPERTY OWNER:
KIRKORIAN FAMILY PARTNERSHIP
290 SARATOGA - LOS GATOS RD
LOS GATOS, CA 95030
CONTACT: JOHN KIRKORIAN
PHONE: (408) 379-4547

POWER AGENCY:
PG&E CORPORATION
1 MARKET STREET, SPEAR TOWER
SAN FRANCISCO, CA 94105-1126
PHONE: (800) 743-5000

TELEPHONE AGENCY:
AT&T CALIFORNIA
525 MARKET STREET
SAN FRANCISCO, CA 94105
PHONE: (800) 310-2355

## PROJECT TEAM

APPLICANT / LESSEE:
AT&T MOBILITY
5001 EXECUTIVE PARKWAY
SAN RAMON, CALIFORNIA 94583
CONTACT: LAURA BLAKE
EMAIL: lg1589@att.com

SITE ACQUISITION:
EPIC WIRELESS
CARL JONES
carl.jones@epicwireless.net
(916) 798-2275

CONSTRUCTION MANAGER:
EPIC WIRELESS
ANDREW MEDINA
EMAIL: andrew.medina@epicwireless.net
PHONE: (530) 574-4773

STRUCTURAL ENGINEER:
VECTOR ENGINEERS
651 W. GALENA PARK BLVD., SUITE 101
DRAPER, UT 84020
CONTACT: WELLS HOLMES
PHONE: (801) 990-1775
www. vectorse.com

M SQUARED WIRELESS:
1387 CALLE AVANZADO
SAN CLEMENTE, CA 92673
CONTACT: MICHAEL MONTELLO
PHONE: (949) 391-6824
www.msquaredwireless.com

RF ENGINEER:
AT&T MOBILITY
5001 EXECUTIVE PARKWAY
SAN RAMON, CALIFORNIA 94583
CONTACT: HARPREET SINGH
EMAIL: HS357s@att.com

CIVIL VENDOR:
BECHTEL
5000 EXECUTIVE PKWY
SUITE 350,
SAN RAMON, CA 94583
CONTACT: BEAU WILLIAMS
EMAIL: bwill12@bechtel.com
PHONE: (925) 272-5793

## SHEET INDEX


| | | | REV |
|---|---|---|---|
| 1 | T-1 | TITLE SHEET | 2 |
| 2 | T-2 | CONDITIONS OF APPROVAL (COA) | 2 |
| 3 | T-3 | CONDITIONS OF APPROVAL (COA) | 2 |
| 4 | GN-1 | GENERAL NOTES | 2 |
| 5 | GN-2 | GENERAL NOTES | 2 |
| 6 | GN-3 | GENERAL NOTES | 2 |
| 7 | C-1 | SITE SURVEY | 2 |
| 8 | C-2 | SITE SURVEY | 2 |
| 9 | A-0 | SITE PLAN | 2 |
| 10 | A-1 | ENLARGED SITE PLAN | 2 |
| 11 | A-2 | EQUIPMENT LAYOUT PLAN | 2 |
| 12 | A-3 | ANTENNA PLAN AND SCHEDULE | 2 |
| 13 | A-4 | ELEVATIONS | 2 |
| 14 | A-5 | ELEVATIONS | 2 |
| 15 | A-6 | SITE PHOTOGRAPHY | 2 |
| 16 | D-1 | DETAILS | 2 |
| 17 | D-2 | DETAILS | 2 |
| 18 | D-3 | BATTERY SPECIFICATION DETAIL | 2 |
| 19 | E-1 | ELECTRICAL NOTES & LEGEND | 2 |
| 20 | E-2 | UTILITY ROUTE PLAN | 2 |
| 21 | E-3 | SINGLE LINE DIAGRAM & PANEL SCHEDULE | 2 |
| 22 | E-4 | GROUNDING PLAN | 2 |
| 23 | E-5 | ELECTRICAL & GROUNDING DETAILS | 2 |
| 24 | E-6 | FIBER SCOPE OF WORK | 2 |
| 25 | E-7 | FIBER SCOPE OF WORK | 2 |
| 26 | SN-1 | STRUCTURAL NOTES | 2 |
| 27 | S-1 | STRUCTURAL ROOF PLAN | 2 |
| 28 | S-2 | SCREEN WALL DETAILS | 2 |
| 29 | S-3 | LADDER DETAILS | 2 |
| 30 | GSN | GENERAL NOTES | 2 |
| 31 | S1.0 | COPULA PLANS & SECTION AT TRUSS | 2 |
| 32 | S2.0 | SECTION AT RIDGE BEAM & DETAILS | 2 |
| 33 | S3.0 | FRAMING DETAILS | 2 |
| 34 | S4.0 | WALL FRAMING ELEVATIONS AND SECTIONS | 2 |
| 35 | S5.0 | SECTOR "B" PLAN & DETAILS | 2 |
| 36 | FRP1.0 | FRP SCREEN WALL PLANS | 2 |
| 37 | FRP2.0 | FRP PANEL 'A1' & DETAILS | 2 |
| 38 | FRP3.0 | FRP PANEL 'A2' & DETAILS | 2 |
| 39 | FRP4.0 | FRP PANEL 'A3' & POST 'C1' | 2 |
| 40 | FRP5.0 | SECTOR'B' ENCLOSURE ASSEMBLY & FRP PANEL 'B1' & 'B2' | 2 |


## CODE COMPLIANCE

ALL WORK AND MATERIALS SHALL BE PERFORMED AND INSTALLED IN ACCORDANCE WITH THE CURRENT EDITIONS OF THE FOLLOWING CODES AS ADOPTED BY THE LOCAL GOVERNING AUTHORITIES.

- CALIFORNIA ADMINISTRATIVE CODE (INCL TITLE 24 & 25)
- 2022 CALIFORNIA BUILDING CODE (CBC)
- CITY/COUNTY ORDINANCES
- BUILDING OFFICIALS & CODE ADMINISTRATORS (BOCA)
- 2022 CALIFORNIA FIRE CODE (CFC)
- 2022 CALIFORNIA BUILDING CODE (2021 IBC)
- 2022 CALIFORNIA RESIDENTIAL CODE (CRC)
- 2022 CALIFORNIA ELECTRICAL CODE
- 2022 CALIFORNIA MECHANICAL CODE (CMC)
- 2022 CALIFORNIA PLUMBING CODE (CPC)
- 2022 CALIFORNIA ENERGY CODE
- 2022 CALIFORNIA GREEN BUILDING CODE

## VICINITY MAP

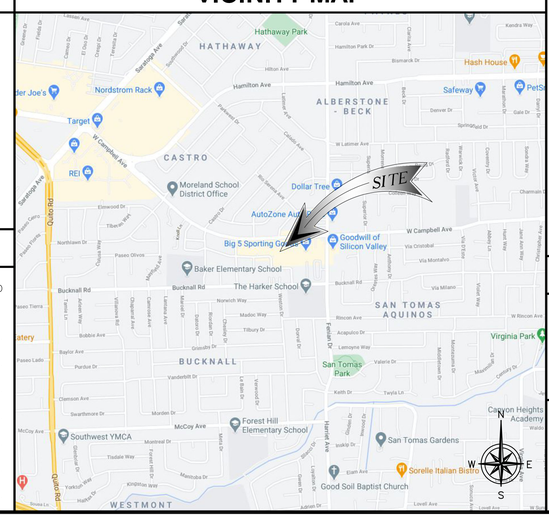


## APPROVALS

THE FOLLOWING PARTIES HEREBY APPROVE AND ACCEPT THESE DOCUMENTS & AUTHORIZE THE SUBCONTRACTOR TO PROCEED WITH THE CONSTRUCTION DESCRIBED HEREIN. ALL DOCUMENTS ARE SUBJECT TO REVIEW BY THE LOCAL BUILDING DEPARTMENT & MAY IMPOSE CHANGES OR MODIFICATIONS.

AT&T RF ENGINEER: _____ DATE: _____

AT&T OPERATIONS: _____ DATE: _____

SITE ACQUISITION: _____ DATE: _____

CONSTRUCTION MANAGER: _____ DATE: _____

PROPERTY OWNER: _____ DATE: _____

ZONING: _____ DATE: _____

PROJECT MANAGER: _____ DATE: _____

## DIRECTIONS

DIRECTIONS FROM AT&T OFFICE AT 5001 EXECUTIVE PARKWAY, SAN RAMON, CA:

1. HEAD SOUTHWEST
2. TURN RIGHT
3. TURN LEFT TOWARD EXECUTIVE PKWY
4. TURN RIGHT TOWARD EXECUTIVE PKWY
5. TURN RIGHT ONTO EXECUTIVE PKWY
6. TURN RIGHT ONTO CAMINO RAMON
7. USE THE RIGHT 2 LANES TO TURN RIGHT ONTO BOLLINGER CANYON RD
8. USE THE RIGHT LANE TO MERGE ONTO I-680 S VIA THE RAMP TO SAN JOSE
9. MERGE ONTO I-680 S
10. TAKE EXIT 12 TO MERGE ONTO CA-262 S/MISSION BLVD
11. MERGE ONTO CA-262 S/MISSION BLVD
12. USE THE LEFT 2 LANES TO MERGE ONTO I-880 S TOWARD SAN JOSE
13. KEEP RIGHT TO STAY ON I-880 S
14. KEEP LEFT TO STAY ON I-880 S
15. CONTINUE ONTO CA-17 S
16. USE THE RIGHT LANE TO TAKE THE SAN TOMAS EXPWY EXIT
17. MERGE ONTO SAN TOMAS EXPY
18. USE THE LEFT 2 LANES TO TURN LEFT ONTO W CAMPBELL AVE
19. TURN LEFT
20. TURN LEFT
21. TURN RIGHT

## SPECIAL INSPECTIONS

REFER TO SHEET SN-1 & GSN FOR COMPLETE SPECIAL INSPECTIONS

CALL CALIFORNIA ONE CALL
(800) 227-2600
CALL 3 WORKING DAYS
BEFORE YOU DIG!

## DO NOT SCALE DRAWINGS

THESE DRAWINGS ARE SCALED TO FULL SIZE AT 22"x34" AND HALF SIZE AT 11"x17". CONTRACTOR SHALL VERIFY ALL PLANS AND EXISTING DIMENSIONS AND CONFITIONS ON THE JOB SITE AND SHALL IMMEDIATELY NOTIFY THE DESIGNER / ENGINEER IN WRITING OF ANY DISCREPANCIES BEFORE PROCEEDING WITH THE WORK OR MATERIAL ORDERS OR BE RESPONSIBLE FOR THE SAME. CONTRACTOR SHALL USE BEST MANAGEMENT PRACTICE TO PREVENT STORM WATER POLLUTION DURING CONSTRUCTION.

ISSUED FOR:
KIRKWOOD PLAZA SHOPPING CENTER
1630 W CAMPBELL AVE., CAMPBELL, CA 95008


5001 EXECUTIVE PARKWAY
SAN RAMON, CALIFORNIA 94583

EPIC WIRELESS GROUP LLC
Connecting a Wireless World

M SQUARED WIRELESS
1387 CALLE AVANZADO
SAN CLEMENTE CA 92673 (949) 391-6824


| | |
|---|---|
| AT&T SITE NO: | CCL01280 |
| PROJECT NO: | 13334607 |
| DRAWN BY: | SD |
| CHECKED BY: | MF |

| REV | DATE | DESCRIPTION | BY |
|---|---|---|---|
| 2 | 12/22/2022 | 100% CD'S REVISED | SP |
| 1 | 12/19/2022 | 100% CD'S FOR SUBMITTAL | BM |
| 0 | 11/30/2022 | 100% CD'S FOR REVIEW | BM |
| C | 02/01/2022 | 95% CD'S REVISED – RLS | BM |
| B | 12/20/2021 | 90% CD'S FOR REV-RLS | DR |
| A | 11/29/2021 | 90% CD'S FOR REVIEW | BM |

LICENSOR:

REGISTERED PROFESSIONAL ENGINEER
WELLS HOLMES
S 8203
STRUCTURAL
STATE OF CALIFORNIA
12/22/2022


IT IS A VIOLATION OF LAW FOR ANY PERSON, UNLESS THEY ARE ACTING UNDER THE DIRECTION OF A LICENSED PROFESSIONAL ENGINEER, TO ALTER THIS DOCUMENT.


SHEET TITLE
TITLE SHEET

SHEET NUMBER
**T-1**

CITY OF CAMPBELL
Community Development Department

October 27, 2021

Carl Jones / AT&T Mobility (Applicant)
605 Cottage Dr., #100
Folsom, CA 95630

Re: PLN-2021-90 — 1630 W. Campbell Ave – Conditional Use Permit – Concealed Wireless (Cupola)

Dear Applicant:

Please be advised that at its meeting of October 26, 2021, the Planning Commission adopted Resolution No. 4626 approving a Conditional Use Permit to allow for the establishment of a new concealed wireless facility (rooftop cupola), on the above-referenced property.

This action is effective in ten calendar days, unless appealed in writing to the City Clerk by close of business on Friday, November 5, 2021. The time within which judicial review of this action must be sought is governed by Section 1094.6 of the California Code of Civil Procedure, unless another statute (such as California Government Code Section 65009 or some other applicable provision) sets forth a more specific time period.

Conditions of approval of this project may require fees(s), dedication(s), reservation(s), or other exaction(s). These copies of the approved Resolutions and/or Ordinances that set forth the conditions that describe these fee(s), dedication(s), reservation(s), and other exaction(s) have been attached for your reference. The 90-day period in which you may protest the approval of fee(s), dedication(s), reservation(s), or other exaction(s) has begun.

If you have any questions, do not hesitate to contact me at (408) 866-2140.

Sincerely,

Stephen Rose
Senior Planner

cc John Kirkorian / Kirkorian Partnership (Property Owners)
290 Saratoga-Los Gatos Rd.
Los Gatos, CA 95030



**RESOLUTION NO. 4626**

BEING A RESOLUTION OF THE PLANNING COMMISSION OF THE CITY OF CAMPBELL GRANTING APPROVAL OF A CONDITIONAL USE PERMIT WITH SITE AND ARCHITECTURAL REVIEW (PLN-2021-90) TO ALLOW THE ESTABLISHMENT OF A NEW CONCEALED WIRELESS FACILITY (ROOFTOP CUPOLA) ON PROPERTY LOCATED AT **1630 W. CAMPBELL AVENUE** IN THE C-1 (NEIGHBORHOOD COMMERCIAL) ZONING DISTRICT.

After notification and public hearing, as specified by law and after presentation by the Community Development Director, proponents and opponents, the hearing was closed.

The Planning Commission did find as follows with regard to application PLN-2021-90:

1. The project site is zoned C-1 (Neighborhood Commercial) and designated *Neighborhood Commercial* by the General Plan.
2. The project site is located within the 12-acre Kirkwood Plaza Shopping Center.
3. The proposed cupola is located at the southwest corner of the largest building onsite, between Nob Hill Foods and Forthright Oyster Kitchen.
4. The applicant is requesting approval of a Conditional Use Permit with Site and Architectural Review to allow for the removal and replacement of an existing rooftop cupola to facilitate the installation of a new concealed (rooftop) wireless communications facility. The scope of work also involves extending the height of an existing rooftop mechanical equipment screen and installing a new access ladder on the south side of the building.
5. The cupola is proposed to be 45-feet, 3-inches tall, or 10-feet, 3-inches taller than the maximum height allowed by the C-1 (Neighborhood Commercial) zoning district (i.e., 35-feet).
6. As the roof structure (i.e., cupola) would not serve to provide 'additional floor space', and the antennas support the operation of the onsite buildings (point of sale, music, and security systems often rely on or are supported by wireless connections), the proposed roof structure may be considered to house 'similar equipment' to those examples listed under CMC 21.18.050 and thereby warrant a height exception.
7. Although the project includes development plans, it does not require a separate architectural review permit application but is subject to site and architectural review in accordance with CMC 21.45.050.
8. Applicable General Plan Policies considered by the Planning Commission included, but were not limited to, the following:

   Policy LUT-9.31: Neighborhood Integrity: Minimize the visual impact of wireless telecommunication facilities by designing them as an integral architectural feature to a structure.



   Policy LUT-13.1: Variety of Uses: Attract and maintain a variety of uses that create an economic balance within the City while maintaining a balance with other community land use needs, such as housing and open space, and while providing high quality services to the community.

9. No substantial evidence has been presented which shows that the project, as currently presented and subject to the required conditions of approval, will have a significant adverse impact on the environment.

Based upon the foregoing findings of fact, the Planning Commission further finds and concludes that:
Conditional Use Permit Findings (CMC Sec. 21.46.040):

10. The proposed use is allowed within the applicable zoning district with Conditional Use Permit approval, and complies with all other applicable provisions of this Zoning Code and the Campbell Municipal Code;
11. The proposed use is consistent with the General Plan;
12. The proposed site is adequate in terms of size and shape to accommodate the fences and walls, landscaping, parking and loading facilities, yards, and other development features required in order to integrate the use with uses in the surrounding area;
13. The proposed site is adequately served by streets of sufficient capacity to carry the kind and quantity of traffic the use would be expected to generate;
14. The design, location, size, and operating characteristics of the proposed use are compatible with the existing and future land uses on-site and in the vicinity of the subject property;
15. The establishment, maintenance, or operation of the proposed use at the location proposed will not be detrimental to the comfort, health, morals, peace, safety, or general welfare of persons residing or working in the neighborhood of the proposed use, or be detrimental or injurious to property and improvements in the neighborhood or to the general welfare of the city;

Site and Architectural Review Permit Findings (CMC Sec. 21.42.060.B):

16. The project will be consistent with the General Plan;
17. The project will aid in the harmonious development of the immediate area;
18. The project is consistent with applicable adopted design guidelines, development agreement, overlay district, area plan, neighborhood plan, and specific plan(s).



Environmental Finding(s) (CMC Sec. 21.38.050):

19. The project is Categorically Exempt under Section 15301 (Class 1) of the California Environmental Quality Act (CEQA), pertaining to the operation and leasing, and minor alteration of an existing private structure.
20. No substantial evidence has been presented which shows that the project, as currently presented and subject to the required conditions of approval, will have a significant adverse impact on the environment.

THEREFORE, BE IT RESOLVED that the Planning Commission grants approval of a Conditional Use Permit with Site and Architectural Review (PLN-2021-90) to allow the establishment of a new concealed wireless facility (rooftop cupola) on property located at 1630 W. Campbell Avenue subject to the attached Conditions of Approval (attached **Exhibit A**).

PASSED AND ADOPTED this 26th day of October, 2021, by the following roll call vote:

AYES: Commissioners: Buchbinder, Krey, Kamkar, Rivlin, Ostrowski, Zisser
NOES: Commissioners: None
ABSENT: Commissioners: Ching
ABSTAIN: Commissioners: None

APPROVED: _____
Maggie Ostrowski, Chair

ATTEST: _____
Rob Eastwood, Secretary

**EXHIBIT A**

**CONDITIONS OF APPROVAL**
Conditional Use Permit (PLN-2021-90)

Where approval by the Director of Community Development, City Engineer, Public Works Director, City Attorney or Fire Department is required, that review shall be for compliance with all applicable conditions of approval, adopted policies and guidelines, ordinances, laws and regulations and accepted engineering practices for the item under review. Additionally, the applicant is hereby notified that he/she is required to comply with all applicable Codes or Ordinances of the City of Campbell and the State of California that pertain to this development and are not herein specified.

**COMMUNITY DEVELOPMENT DEPARTMENT**

**PLANNING DIVISION**

1. Approved Project: Approval is granted for a Conditional Use Permit with Site and Architectural Review (PLN-2021-90) to allow the establishment of a new concealed wireless facility (rooftop cupola) on property located at **1630 W. Campbell Avenue**. The project shall substantially conform to the Project Plans included as Attachment 2 and Photosimulation included as Attachment 3 in the October 26, 2021 Planning Commission Staff Report, except as may be modified by the Conditions of Approval contained herein.
2. Permit Approval Expiration: The Conditional Use Permit with Site and Architectural Review (PLN-2021-90) shall be valid for one year from the date of final approval (expiring November 5, 2022). Within this one-year period, an application for the Building Permit must be submitted. Failure to meet this deadline or expiration of the Building Permit plan check or issued Building Permit will result in the Conditional Use Permit with Site and Architectural Review being rendered void.
3. Plan Revisions: Upon prior approval by the Community Development Director, all Minor Modifications to the approved project plans shall be included in the construction drawings submitted for Building Permit. Any modifications to the Building plan set during construction shall require submittal of a Building Permit Revision and approval by the Building Official prior to Final Inspection. Further, prior to building permit submittal, the following revisions to the plans shall be incorporated to the satisfaction of the Community Development Director:
   a. Paint Color: The cupola shall be painted a 'brick red' color as to match the existing building below.
   b. Metal Roof: The standing seam metal roof shall be redesigned to include a hipped roof element like that of adjacent buildings onsite.
   c. Medallions & Banding: The existing ledgestone medallions and banding shall be removed and replaced higher on the cupola.



   d. Kirkwood Sign: The Kirkwood Plaza Shopping Center 'K' Sign shall be relocated higher on the cupola or replaced with a functional element such as a clock.
   e. Ladder: The ladder at the rear of the building shall be redesigned to avoid presenting a climbing hazard either by providing a complete cage around the ladder to prohibit unauthorized access and/or by extending the building in this area to be flush with the ladder to prevent access from the rear.
4. Contractor Contact Information Posting: The project site shall be posted with the name and contact number of the lead contractor in a location visible from the public street prior to the issuance of building permits. The contractor contact information posting shall be removed upon project completion (building permit final).
5. Construction Activities: The applicant shall abide by the following requirements during construction:
   a. The project site shall be posted with the name and contact number of the lead contractor in a location visible from the public street prior to the issuance of building permits.
   b. Construction activities shall be limited to weekdays between 8:00 a.m. and 5:00 p.m. and Saturdays between 9:00 a.m. and 4:00 p.m. No construction shall take place on Sundays or holidays unless an exception is granted by the Building Official.
   c. All construction equipment with internal combustion engines used on the project site shall be properly muffled and maintained in good working condition.
   d. Unnecessary idling of internal combustion engines shall be strictly prohibited.
   e. All stationary noise-generating construction equipment, such as air compressors and portable power generators, shall be located as far as possible from noise-sensitive receptors such as existing residences and businesses.
   f. Use standard dust and erosion control measures that comply with the adopted Best Management Practices for the City of Campbell.
6. Construction Hours/Fines/Stop Work Notice: Failure to comply with permitted working hours that result in verified complaints may result in the issuance of a Stop Work Notice issued to the project with cessation of work for a minimum of seven (7) days from the date of issuance and an Administrative fine of up to $1,000.00.
7. Timely Completion: Once under construction it shall be the obligation of the property owner and contractor to demonstrate continued progress on the project. In the event the building permit expires, the City may impose fines or exercise administrative remedies to compel timely completion of work.
8. No Ground Mounted Equipment: The facility is not approved for any ground mounted equipment. Accordingly, no ground mounted equipment shall be permitted to be added

ISSUED FOR:
KIRKWOOD PLAZA SHOPPING CENTER
1630 W CAMPBELL AVE., CAMPBELL, CA 95008

at&t
5001 EXECUTIVE PARKWAY
SAN RAMON, CALIFORNIA 94583

EPIC WIRELESS GROUP LLC
Connecting a Wireless World

M SQUARED WIRELESS
1387 CALLE AVANZADO
SAN CLEMENTE CA 92673 (949) 391-6824

| | |
|---|---|
| AT&T SITE NO: | CCL01280 |
| PROJECT NO: | 13334607 |
| DRAWN BY: | SD |
| CHECKED BY: | MF |

| REV | DATE | DESCRIPTION | BY |
|---|---|---|---|
| 2 | 12/22/2022 | 100% CD'S REVISED | SP |
| 1 | 12/19/2022 | 100% CD'S FOR SUBMITTAL | BM |
| 0 | 11/30/2022 | 100% CD'S FOR REVIEW | BM |
| C | 02/01/2022 | 95% CD'S REVISED – RLS | BM |
| B | 12/20/2021 | 90% CD'S FOR REV–RLS | DR |
| A | 11/29/2021 | 90% CD'S FOR REVIEW | BM |

LICENSOR:

REGISTERED PROFESSIONAL ENGINEER
WELLS HOLMES
S 8203
STRUCTURAL
STATE OF CALIFORNIA
12/22/2022

IT IS A VIOLATION OF LAW FOR ANY PERSON, UNLESS THEY ARE ACTING UNDER THE DIRECTION OF A LICENSED PROFESSIONAL ENGINEER, TO ALTER THIS DOCUMENT.

SHEET TITLE
CONDITIONS OF APPROVAL (COA)

SHEET NUMBER
T-2

to the site as part of an Eligible Facilities Request (EFR) request made under Section 6409(a) and FCC rules implementing Section 6409 of the Spectrum Act, codified at 47 U.S.C. 1455.

9. Cessation of Operations: The service provider shall provide written notification to the community development director upon cessation of operations on the site exceeding a ninety-calendar day period. The service provider, permittee and/or property owner shall remove all obsolete or unused facilities from the site within one hundred eighty calendar days of termination of the lease with the property owner or cessation of operations, whichever comes earlier.

   a. New Permit Required. If a consecutive period of one hundred eighty calendar days has lapsed since cessation of operations, a new permit shall be required prior to use or reuse of the site.

10. Length of Approval: A validly issued conditional use permit, or administrative site and architectural review permit shall be valid for a period of ten years from the effective date of the approval or date the facility gains a "deemed granted" status (subject permit is for a Conditional Use Permit with Site and Architectural Review and expires November 5, 2031) but may be reduced for public safety reasons or substantial land use reasons pursuant to Government Code Section 65964(b). Use permits and site and architectural review permits approved prior to the effective date of this ordinance shall expire pursuant to the previously approved permit term. If a request for a renewal of the required permits(s) is received before the permit expiration, the permit shall remain in effect until a decision on the renewal is made or the application is withdrawn. Communication facilities that exist on the effective date of this chapter without a specified expiration date (e.g. because the governing permit(s) contained no expiration date or due to non-conforming status), and which had not otherwise already expired (e.g. due to the previously established amortization period(s) contained in City Council Ordinance 2070, CMC Section 21.34.060(E), and/or CMC Section 21.58.040(F), as they existed prior to the effective date of this Chapter), shall expire five years from the effective date of this chapter or ten years from the date of their establishment, whichever is greater. Nothing contained in this Chapter is intended to revive or extend any permit or use that expired on or prior to the effective date of this Chapter.

   a. The permit may be renewed for subsequent time periods, subject to the following:

      i. The renewal application is filed with the community development department prior to expiration, but no earlier than twenty-four months prior to expiration.

      ii. The permit approval may be administratively extended by the community development director from the initial approval date for a subsequent ten years and may be extended by the community development director every ten years thereafter upon verification that the facility continues to comply with this chapter (as may be amended from time to time) and all



conditions of approval under which the facility was approved. All costs associated with the review process shall be borne by the service provider, permittee and/or property owner.

      iii. This provision shall not apply to conditional use permits or administrative site and architectural review permits granted prior to the effective date of this chapter. However, applications for use permits or site and architectural review permits to modify existing wireless communications facilities that are granted on or after the effective date of this chapter are subject to this subsection 21.34.070(A)(2)(a).

   b. If a request for renewal of the required permit(s) is not timely received and the permit expires, the City may declare the facility(ies) abandoned or discontinued in accordance with Section 21.34.070(A)(16) (Abandonment).

11. Business License Required: Each service provider with a wireless communications facility in the City shall obtain and maintain a City business license.

12. Impact on Parking: The installation of wireless communication facilities shall not reduce required parking on the site. For the purposes of this requirement, routine maintenance activities shall not be considered to result in a measurable impact on parking. Applications for eligible facilities requests shall be exempt from this condition provided that any reduction in onsite parking spaces does not violate a prior condition of approval or applicable building or safety code.

13. Implementation and Monitoring Costs: The wireless communications permittee, service provider or its/their successor shall be responsible for the payment of all reasonable costs associated with the monitoring of the conditions of approval, including, but not limited to, costs incurred by the community development department, the office of the city attorney or any other appropriate City department or agency, to the full extent such costs are recoverable or collectible under applicable state and/or federal law. The community development department shall collect costs on behalf of the City.

14. Development and Operational Standards: All facilities shall satisfy the development standards of the district in which they are proposed, as well as the Development and Operational Standards outlined in CMC 21.16 (e.g. Electrical Interference, Light and Glare, Noise, Odor, Vibration, Maintenance) and the Site Development Standards (e.g. as specified in CMC 21.18). Exceptions to development and operational standards shall only be permitted for (A) an eligible facility request to the extent required by law, (B) a subsequent collocation facility to the extent required by California Government Code section 65850.6(a), or (C) for a stealth facility when such exception is limited to maximum allowable heights, or minimum setbacks, and when such exception would not result in a perceivable visual impact.



15. Permits: All permits required for the installation of the facility and associated improvements, shall be completed prior to operation of the facility (or component of that facility).

16. Concealment: Every aspect of a stealth and/or concealed facility is considered an element of concealment including, but not limited to, the dimensions, bulk and scale, color, materials and texture. For all other facilities, elements such as dimension, scale, color, materials, and textures may be considered stealth and/or concealment elements of the facility. Any future modifications to the facility must not defeat concealment.

17. Compliance with Applicable Laws: The permittee and service provider shall at all times comply with all applicable provisions of the CMC including, but not limited to, Title 21 (Zoning), any permit or approval issued under the CMC including, but not limited to, Title 21 (Zoning), and all other applicable federal, state and local laws, rules and regulations. Failure by the City to enforce compliance with applicable laws, rules or regulations shall not relieve any permittee of its obligations under the CMC including, but not limited to, Title 21 (Zoning), any permit or approval issued under the CMC, or any other applicable laws, rules and regulations.

18. Compliance with Approved Plans: The facility shall be built in compliance with the approved plans on file with the community development department.

19. Inspections; Emergencies: The City or its designee may enter onto the facility area to inspect the facility upon reasonable notice to the permittee in times of emergency. The permittee shall cooperate with all inspections. The City reserves the right to enter (or direct its designee to enter) the facility and support, repair, disable or remove any elements of the facility in emergencies or when the facility threatens imminent harm to persons or property.

20. Contact Information for Responsible Parties: The permittee shall at all times maintain accurate contact information for all parties responsible for the facility, which shall include a phone number, street mailing address and email address for at least one natural person. All such contact information for responsible parties shall be provided to the community development director upon request.

21. General Maintenance: The site and the facility, including but not limited to all landscaping, fencing, concealment features, and related transmission equipment, must be maintained in a neat and clean manner and in accordance with all approved plans and conditions of approval.

22. Graffiti Removal: All graffiti on facilities must be removed at the sole expense of the permittee within forty-eight hours after notification from the City.

23. FCC (including, but not limited to, RF Exposure) Compliance: All facilities must comply with all standards and regulations of the FCC and any other state or federal government agency with the authority to regulate such facilities.



24. Abandonment:

   a. To promote the public health, safety and welfare, the community development director may declare a facility (or component of a facility) abandoned or discontinued when: (a) The permittee or service provider abandoned or discontinued the use of a facility (or component of a facility) for a continuous period of ninety calendar days; or (b) The permittee or service provider fails to respond within thirty calendar days to a written notice from the community development director that states the basis for the community development director's belief that the facility (or component of the facility) has been abandoned or discontinued for a continuous period of ninety calendar days; or (c) The permit expires and the permittee has failed to file a timely application for renewal.

   b. After the community development director declares a facility (or component of a facility) abandoned or discontinued, the permittee shall have sixty calendar days from the date of the declaration (or longer time as the community development director may approve in writing as reasonably necessary) to: (a) reactivate the use of the abandoned or discontinued facility (or component thereof) subject to the provisions of this chapter and all conditions of approval; or (b) remove the facility (or component of that facility) and all improvements installed in connection with the facility (or component of that facility), unless directed otherwise by the community development director, and restore the site to a condition in compliance with all applicable codes and consistent with the then-existing surrounding area.

   c. If the permittee fails to act as required in Section 21.34.070(A)(16)(b) within the prescribed time period, the City may (but shall not be obligated to) remove the abandoned facility (or abandoned component of the facility), restore the site to a condition in compliance with all applicable codes and consistent with the then-existing surrounding area, and repair any and all damages that occurred in connection with such removal and restoration work. The City may, but shall not be obligated to, store the removed facility (or component of the facility) or any part thereof, and may use, sell or otherwise dispose of it in any manner the City deems appropriate. The last-known permittee or its successor-in-interest and, if on private property, the real property owner shall be jointly liable for all costs and expenses incurred by the City in connection with such removal, restoration, repair and storage, and shall promptly reimburse the City upon receipt of a written demand, including, without limitation, any interest on the balance owing at the maximum lawful rate. The City may, but shall not be obligated to, use any financial security required in connection with the granting of the facility permit to recover its costs and interest. Until the costs are paid in full, a lien shall be placed on the facility, all related personal property in connection with the facility and, if applicable, the real private property on which the facility was located for the full amount of all costs for removal, restoration, repair and storage (plus applicable interest). The City Clerk shall cause the lien to be recorded with the County of Santa Clara Recorder's Office. Within sixty calendar days after the lien amount is



fully satisfied including costs and interest, the City Clerk shall cause the lien to be released with the County of Santa Clara Recorder's Office.

   d. After a permittee fails to comply with any provisions of this Section 21.34.070(A)(16) (Abandonment), the City may elect to treat the facility as a nuisance to be abated as provided in the CMC (including, but not limited to, Chapter 6.10).

25. Indemnities: The permittee, service provider, and, if applicable, the non-government owner of the private property upon which the tower and/or base station is installed (or is to be installed) shall defend (with counsel reasonably satisfactory to the City), indemnify and hold harmless the City of Campbell its officers, officials, directors, agents, representatives, and employees (i) from and against any and all damages, liabilities, injuries, losses, costs and expenses and from and against any and all claims, demands, lawsuits, judgments, writs of mandamus and other actions or proceedings brought against the City or its officers, officials, directors, agents, representatives, or employees to challenge, attack, seek to modify, set aside, void or annul the City's approval of the permit, and (ii) from and against any and all damages, liabilities, injuries, losses, costs and expenses and any and all claims, demands, lawsuits, judgments, or causes of action and other actions or proceedings of any kind or form, whether for personal injury, death or property damage, arising out of, in connection with or relating to the acts, omissions, negligence, or performance of the permittee, the service provider, and/or, if applicable, the private property owner, or any of each one's agents, representatives, employees, officers, directors, licensees, contractors, subcontractors or independent contractors. It is expressly agreed that the City shall have the right to approve (which approval shall not be unreasonably withheld) the legal counsel providing the City's defense, and the property owner, service provider, and/or permittee (as applicable) shall reimburse City for any and all costs and expenses incurred by the City in the course of the defense.

**Building Division**

26. Permit Required: A Building Permit application shall be required for the proposed project. The Building Permit shall include Electrical/Plumbing/Mechanical fees when such work is part of the permit.

27. Conditions of Approval: The Conditions of Approval shall be stated in full on the cover sheet of construction plans submitted for building permit.

**FIRE DEPARTMENT**

28. Formal Plan Review: Review of this development proposal is limited to accessibility of site access and water supply as they pertain to fire department operations, and shall not be construed as a substitute for formal plan review to determine compliance with adopted model codes. Prior to performing any work the applicant shall make application to, and receive from, the Building Division all applicable construction permits.



29. No Violation: This review shall not be construed to be an approval of a violation of the provisions of the California Fire Code or of other laws or regulations of the jurisdiction. A permit presuming to give authority to violate or cancel the provisions of the Fire Code or other such laws or regulations shall not be valid. Any addition to or alteration of approved construction documents shall be approved in advance. [CFC, Ch.1, 105.3.6].

ISSUED FOR:
KIRKWOOD PLAZA SHOPPING CENTER
1630 W CAMPBELL AVE., CAMPBELL, CA 95008

at&t
5001 EXECUTIVE PARKWAY
SAN RAMON, CALIFORNIA 94583

EPIC WIRELESS GROUP LLC
Connecting a Wireless World

M SQUARED WIRELESS
1387 CALLE AVANZADO
SAN CLEMENTE CA 92673 (949) 391-6824

| | |
|---|---|
| AT&T SITE NO: | CCL01280 |
| PROJECT NO: | 13334607 |
| DRAWN BY: | SD |
| CHECKED BY: | MF |

| REV | DATE | DESCRIPTION | BY |
|---|---|---|---|
| | | | |
| | | | |
| | | | |
| 2 | 12/22/2022 | 100% CD'S REVISED | SP |
| 1 | 12/19/2022 | 100% CD'S FOR SUBMITTAL | BM |
| 0 | 11/30/2022 | 100% CD'S FOR REVIEW | BM |
| C | 02/01/2022 | 95% CD'S REVISED – RLS | BM |
| B | 12/20/2021 | 90% CD'S FOR REV–RLS | DR |
| A | 11/29/2021 | 90% CD'S FOR REVIEW | BM |

LICENSOR:

REGISTERED PROFESSIONAL ENGINEER
WELLS HOLMES
S 8203
STRUCTURAL
STATE OF CALIFORNIA

12/22/2022

IT IS A VIOLATION OF LAW FOR ANY PERSON, UNLESS THEY ARE ACTING UNDER THE DIRECTION OF A LICENSED PROFESSIONAL ENGINEER, TO ALTER THIS DOCUMENT.

SHEET TITLE
CONDITIONS OF APPROVAL (COA)

SHEET NUMBER
T-3

## GENERAL CONSTRUCTION NOTES:

1. FOR THE PURPOSE OF CONSTRUCTION DRAWINGS, THE FOLLOWING DEFINITIONS SHALL APPLY:
   GENERAL CONTRACTOR – GENERAL CONTRACTOR
   SUBCONTRACTOR – CONTRACTOR (CONSTRUCTION)
   OWNER – AT&T
2. ALL SITE WORK SHALL BE COMPLETED AS INDICATED ON THE DRAWINGS AND AT&T PROJECT SPECIFICATIONS.
3. GENERAL CONTRACTOR AND SUBCONTRACTOR SHALL VISIT THE SITE AND SHALL FAMILIARIZE HIMSELF WITH ALL CONDITIONS AFFECTING THE NEW WORK AND SHALL MAKE PROVISIONS. GENERAL CONTRACTOR AND SUBCONTRACTOR SHALL BE RESPONSIBLE FOR FAMILIARIZING HIMSELF WITH ALL CONTRACT DOCUMENTS, FIELD CONDITIONS, DIMENSIONS, AND CONFIRMING THAT THE WORK MAY BE ACCOMPLISHED AS SHOWN PRIOR TO PROCEEDING WITH CONSTRUCTION. ANY DISCREPANCIES SHALL BE BROUGHT TO THE ATTENTION OF THE ARCHITECT/ENGINEER PRIOR TO THE COMMENCEMENT OF WORK.
4. ALL MATERIALS FURNISHED AND INSTALLED SHALL BE IN STRICT ACCORDANCE WITH ALL APPLICABLE CODES, REGULATIONS, AND ORDINANCES. GENERAL CONTRACTOR SHALL ISSUE ALL APPROPRIATE NOTICES AND COMPLY WITH ALL LAT&T, ORDINANCES, RULES, REGULATIONS, AND LAWFUL ORDERS OF ANY PUBLIC AUTHORITY REGARDING THE PERFORMANCE OF WORK.
5. ALL WORK CARRIED OUT SHALL COMPLY WITH ALL APPLICABLE MUNICIPAL AND UTILITY COMPANY SPECIFICATIONS AND LOCAL JURISDICTIONAL CODES, ORDINANCES, AND APPLICABLE REGULATIONS.
6. UNLESS NOTED OTHERWISE, THE WORK SHALL INCLUDE FURNISHING MATERIALS, EQUIPMENT, APPURTENANCES, AND LABOR NECESSARY TO COMPLETE ALL INSTALLATIONS AS INDICATED ON THE DRAWINGS.
7. PLANS ARE NOT TO BE SCALED. THESE PLANS ARE INTENDED TO BE A DIAGRAMMATIC OUTLINE ONLY UNLESS OTHERWISE NOTED. DIMENSIONS SHOWN ARE TO FINISH SURFACES UNLESS OTHERWISE NOTED. SPACING BETWEEN EQUIPMENT IS THE MINIMUM REQUIRED CLEARANCE. THEREFORE, IT IS CRITICAL TO FIELD VERIFY DIMENSIONS, SHOULD THERE BE ANY QUESTIONS REGARDING THE CONTRACT DOCUMENTS, THE SUBCONTRACTOR SHALL BE RESPONSIBLE FOR OBTAINING A CLARIFICATION FROM THE ARCHITECT/ENGINEER PRIOR TO PROCEEDING WITH THE WORK. DETAILS ARE INTENDED TO SHOWN DESIGN INTENT. MODIFICATIONS MAY BE REQUIRED TO SUIT JOB DIMENSIONS OR CONDITIONS AND SUCH MODIFICATIONS SHALL BE INCLUDED AS PART OF WORK AND PREPARED BY THE ARCHITECT/ENGINEER PRIOR TO PROCEEDING WITH WORK
8. THE SUBCONTRACTOR SHALL INSTALL ALL EQUIPMENT AND MATERIALS IN ACCORDANCE WITH MANUFACTURER'S RECOMMENDATIONS UNLESS SPECIFICALLY STATED OTHERWISE.
9. IF THE SPECIFIED EQUIPMENT CANNOT BE INSTALLED AS SHOWN ON THESE DRAWINGS. THE SUBCONTRACTOR SHALL PROPOSE AN ALTERNATIVE SPACE FOR APPROVAL BY THE ARCHITECT/ENGINEER PRIOR TO PROCEEDING.
10. GENERAL CONTRACTOR SHALL BE RESPONSIBLE FOR THE SAFETY OF WORK AREA, ADJACENT AREAS AND BUILDING OCCUPANTS THAT ARE LIKELY TO BE AFFECTED BY THE WORK UNDER THIS CONTRACT. WORK SHALL CONFORM TO ALL OSHA REQUIREMENTS AND THE LOCAL JURISDICTION.
11. GENERAL CONTRACTOR SHALL COORDINATE WORK AND SCHEDULE WORK ACTIVITIES WITH OTHER DISCIPLINES.
12. ERECTION SHALL BE DONE IN A WORKMANLIKE MANNER BY COMPETENT EXPERIENCED WORKMAN IN ACCORDANCE WITH APPLICABLE CODES AND THE BEST ACCEPTED PRACTICE. ALL MEMBERS SHALL BE LAID PLUMB AND TRUE AS INDICATED ON THE DRAWINGS.
13. SEAL PENETRATIONS THROUGH FIRE RATED AREAS WITH UL LISTED MATERIALS APPROVED BY LOCAL JURISDICTION. SUBCONTRACTOR SHALL KEEP AREA CLEAN, HAZARD FREE, AND DISPOSE OF ALL DEBRIS.
14. WORK PREVIOUSLY COMPLETED IS REPRESENTED BY LIGHT SHADED LINES AND NOTES. THE SCOPE OF WORK FOR THIS PROJECT IS REPRESENTED BY DARK SHADED LINES AND NOTES. SUBCONTRACTOR SHALL NOTIFY THE GENERAL CONTRACTOR OF ANY EXISTING CONDITIONS THAT DEVIATE FROM THE DRAWINGS PRIOR TO THE BEGINNING CONSTRUCTION.
15. SUBCONTRACTOR SHALL PROVIDE WRITTEN NOTICE TO THE CONSTRUCTION MANAGER 48 HOURS PRIOR TO COMMENCEMENT OF WORK.
16. THE SUBCONTRACTOR SHALL PROTECT EXISTING IMPROVEMENTS, PAVEMENTS, CURBS, LANDSCAPING AND STRUCTURES. ANY DAMAGED PART SHALL BE REPAIRED AT SUBCONTRACTOR'S EXPENSE TO THE SATISFACTION OF THE OWNER.
17. THE SUBCONTRACTOR SHALL CONTACT UTILITY LOCATING SERVICES PRIOR TO THE START OF CONSTRUCTION.
18. GENERAL CONTRACTOR SHALL COORDINATE AND MAINTAIN ACCESS FOR ALL TRADES AND SUBCONTRACTORS TO THE SITE AND/OR BUILDING.
19. THE GENERAL CONTRACTOR SHALL BE RESPONSIBLE FOR SECURITY OF THE SITE FOR THE DURATION OF CONSTRUCTION UNTIL JOB COMPLETION.
20. THE GENERAL CONTRACTOR SHALL MAINTAIN IN GOOD CONDITION ONE COMPLETE SET OF PLANS WITH ALL REVISIONS, ADDENDA, AND CHANGE ORDERS ON THE PREMISES AT ALL TIMES.
21. THE GENERAL CONTRACTOR AND SUBCONTRACTOR SHALL PROVIDE PORTABLE FIRE EXTINGUISHERS WITH A RATING OF NOT LESS THAN 2–A OT 2–A:10–B:C AND SHALL BE WITHIN 25 FEET OF TRAVEL DISTANCE TO ALL PORTIONS OF WHERE THE WORK IS BEING COMPLETED DURING CONSTRUCTION.
22. ALL EXISTING ACTIVE SEWER, WATER, GAS, ELECTRIC, AND OTHER UTILITIES SHALL BE PROTECTED AT ALL TIMES, AND WHERE REQUIRED FOR THE PROPER EXECUTION OF THE WORK, SHALL BE RELOCATED AS DIRECTED BY THE ARCHITECT/ENGINEER. EXTREME CAUTION SHOULD BE USED BY THE SUBCONTRACTOR WHEN EXCAVATING OR DRILLING PIERS AROUND OR NEAR UTILITIES. SUBCONTRACTOR SHALL PROVIDE SAFETY TRAINING FOR THE WORKING CREW. THIS SHALL INCLUDE BUT NOT BE LIMITED TO A) FALL PROTECTION, B) CONFINED SPACE, C) ELECTRICAL SAFETY, D) TRENCHING & EXCAVATION.
23. ALL EXISTING INACTIVE SEWER, WATER, GAS, ELECTRIC, AND OTHER UTILITIES, WHICH INTERFERE WITH THE EXECUTION OF THE WORK, SHALL BE REMOVED, CAPPED, PLUGGED OR OTHERWISE DISCONNECTED AT POINTS WHICH WILL NOT INTERFERE WITH THE EXECUTION OF THE WORK, AS DIRECTED BY THE RESPONSIBLE ARCHITECT/ENGINEER, AND SUBJECT TO THE APPROVAL OF THE OWNER AND/OR LOCAL UTILITIES.
24. THE AREAS OF THE OWNER'S PROPERTY DISTURBED BY THE WORK AND NOT COVERED BY THE TOWER, EQUIPMENT OR DRIVEWAY, SHALL BE GRADED TO A UNIFORM SLOPE, AND STABILIZED TO PREVENT EROSION.
25. SUBCONTRACTOR SHALL MINIMIZE DISTURBANCE TO THE EXISTING SITE DURING CONSTRUCTION. EROSION CONTROL MEASURES, IF REQUIRED DURING CONSTRUCTION, SHALL BE IN CONFORMANCE WITH THE FEDERAL AND LOCAL JURISDICTION FOR EROSION AND SEDIMENT CONTROL.
26. NO FILL OR EMBANKMENT MATERIAL SHALL BE PLACED ON FROZEN GROUNDING. FROZEN MATERIALS, SNOW OR ICE SHALL NOT BE PLACED IN ANY FILL OR EMBANKMENT.
27. THE SUBGRADE SHALL BE BROUGHT TO A SMOOTH UNIFORM GRADE AND COMPACTED TO 95 PERCENT STANDARD PROCTOR DENSITY UNDER PAVEMENT AND STRUCTURES AND 80 PERCENT STANDARD PROCTOR DENSITY IN OPEN SPACE. ALL TRENCHES IN PUBLIC RIGHT OF WAY SHALL BE BACKFILLED WITH FLOWABLE FILL OR OTHER MATERIAL PRE–APPROVED BY THE LOCAL JURISDICTION.
28. ALL NECESSARY RUBBISH, STUMPS, DEBRIS, STICKS, STONES, AND OTHER REFUSE SHALL BE REMOVED FROM THE SITE AND DISPOSED OF IN A LAWFUL MANNER.
29. ALL BROCHURES, OPERATING AND MAINTENANCE MANUALS, CATALOGS, SHOP DRAWINGS, AND OTHER DOCUMENTS SHALL BE TURNED OVER TO THE GENERAL CONTRACTOR AT COMPLETION OF CONSTRUCTION AND PRIOR TO PAYMENT.
30. SUBCONTRACTOR SHALL SUBMIT A COMPLETE SET OF AS–BUILT REDLINES TO THE GENERAL CONTRACTOR UPON COMPLETION OF PROJECT AND PRIOR TO FINAL PAYMENT.
31. SUBCONTRACTOR SHALL LEAVE PREMISES IN A CLEAN CONDITION.
32. THE NEW FACILITY WILL BE UNMANNED AND DOES NOT REQUIRE POTABLE WATER OR SEWER SERVICE, AND IS NOT FOR HUMAN HABITAT (NO HANDICAP ACCESS REQUIRED).
33. OCCUPANCY IS LIMITED TO PERIODIC MAINTENANCE AND INSPECTION, APPROXIMATELY 2 TIMES PER MONTH, BY AT&T TECHNICIANS.
34. NO OUTDOOR STORAGE OR SOLID WASTE CONTAINERS ARE NEW .
35. ALL MATERIAL SHALL BE FURNISHED AND WORK SHALL BE PERFORMED IN ACCORDANCE WITH THE LATEST REVISION AT&T MOBILITY GROUNDING STANDARD "TECHNICAL SPECIFICATION FOR CONSTRUCTION OF GSM/GPRS WIRELESS SITES" AND "TECHNICAL SPECIFICATION FOR FACILITY GROUNDING". IN CASE OF A CONFLICT BETWEEN THE CONSTRUCTION SPECIFICATION AND THE DRAWINGS, THE DRAWINGS SHALL GOVERN.
36. SUBCONTRACTORS SHALL BE RESPONSIBLE FOR OBTAINING ALL PERMITS AND INSPECTIONS REQUIRED FOR CONSTRUCTION. IF SUBCONTRACTOR CANNOT OBTAIN A PERMIT, THEY MUST NOTIFY THE GENERAL CONTRACTOR IMMEDIATELY.
37. SUBCONTRACTOR SHALL REMOVE ALL TRASH AND DEBRIS FROM THE SITE ON A DAILY BASIS.
38. INFORMATION SHOWN ON THESE DRAWINGS WAS OBTAINED FROM SITE VISITS AND/OR DRAWINGS PROVIDED BY THE SITE OWNER. CONTRACTORS SHALL NOTIFY THE ENGINEER OF ANY DISCREPANCIES PRIOR TO ORDERING MATERIAL OR PROCEEDING WITH CONSTRUCTION.
39. NO WHITE STROBIC LIGHTS ARE PERMITTED. LIGHTING IF REQUIRED, WILL MEET FAA STANDARDS AND REQUIREMENTS.
40. ALL COAXIAL CABLE INSTALLATIONS TO FOLLOW MANUFACTURER'S INSTRUCTIONS AND RECOMMENDATIONS.
41. NO NOISE, SMOKE, DUST, OR VIBRATIONS WILL RESULT FROM THIS FACILITY. (DISREGARD THIS NOTE IF THIS SITE HAS A GENERATOR)
42. NO ADDITIONAL PARKING TO BE NEW . EXISTING ACCESS AND PARKING TO REMAIN, UNLESS NOTED OTHERWISE.
43. NO LANDSCAPING IS NEW AT THIS SITE, UNLESS NOTED OTHERWISE.

## ELECTRICAL NOTES:

1. ELECTRICAL CONTRACTOR SHALL SUPPLY AND INSTALL ANY/ALL ELECTRICAL WORK INDICATED. ANY/ALL CONSTRUCTION SHALL BE IN ACCORDANCE W/DRAWINGS AND ANY/ALL APPLICABLE SPECIFICATIONS. IF ANY PROBLEMS ARE ENCOUNTERED BY COMPLYING WITH THESE REQUIREMENTS, CONTRACTOR SHALL NOTIFY 'CONSTRUCTION MANAGER' AS SOON AS POSSIBLE, AFTER THE DISCOVERY OF THE PROBLEMS, AND SHALL NOT PROCEED WITH THAT PORTION OF WORK, UNTIL THE 'CONSTRUCTION MANAGER' HAS DIRECTED THE CORRECTIVE ACTIONS TO BE TAKEN.
2. ELECTRICAL CONTRACTOR SHALL VISIT THE JOB SITE AND FAMILIARIZE HIMSELF WITH ANY/ALL CONDITIONS AFFECTING ELECTRICAL AND COMMUNICATION INSTALLATION AND MAKE PROVISIONS AS TO THE COST THEREOF. ALL EXISTING CONDITIONS OF ELECTRICAL EQUIP., LIGHT FIXTURES, ETC., THAT ARE PART OF THE FINAL SYSTEM, SHALL BE VERIFIED BY THE CONTRACTOR, PRIOR TO THE SUBMITTING OF HIS BID. FAILURE TO COMPLY WITH THIS PARAGRAPH WILL IN NO WAY RELIEVE CONTRACTOR OF PERFORMING ALL WORK NECESSARY FOR A COMPLETE AND WORKING SYSTEM.
3. ALL WORK SHALL BE PERFORMED IN ACCORDANCE WITH THE LATEST EDITION OF THE NEC AND ALL CODES AND LOCAL ORDINANCES OF THE LOCAL POWER & TELEPHONE COMPANIES HAVING JURISDICTION AND SHALL INCLUDE BUT NOT BE LIMITED TO:
   C – NATIONAL FIRE CODES
   A. UL – UNDERWRITERS LABORATORIES
   B. NEC – NATIONAL ELECTRICAL CODE
   C. NEMA – NATIONAL ELECTRICAL MANUFACTURERS ASSOC.
   D. OSHA – OCCUPATIONAL SAFETY AND HEALTH ACT
   E. SBC – STANDARD BUILDING CODE
4. DO NOT SCALE ELECTRICAL DRAWINGS, REFER TO SITE PLANS AND ELEVATIONS FOR EXACT LOCATIONS OF ALL EQUIPMENT, AND CONFIRM WITH 'CONSTRUCTION MANAGER' ANY SIZES AND LOCATIONS WHEN NEEDED.
5. EXISTING SERVICES: CONTRACTOR SHALL NOT INTERRUPT EXISTING SERVICES WITHOUT WRITTEN PERMISSION OF THE OWNER.
6. CONTRACTOR SHALL PAY FOR ANY/ALL PERMITS, FEES, INSPECTIONS AND TESTING. CONTRACTOR IS TO OBTAIN PERMITS AND APPROVED SUBMITTALS PRIOR TO THE WORK BEGINNING OR ORDERING EQUIPMENT.
7. THE TERM "PROVIDE" USED IN CONSTRUCTION DOCUMENTS AND SPECIFICATIONS, INDICATES THAT THE CONTRACTOR SHALL FURNISH AND INSTALL.
8. CONTRACTOR SHALL CONFIRM WITH LOCAL UTILITY COMPANY ANY/ALL REQUIREMENTS SUCH AS THE: LUG SIZE RESTRICTIONS, CONDUIT ENTRY, SIZE OF TRANSFORMERS, SCHEDULED DOWNTIME FOR THE OWNERS' CONFIRMATION, ETC... ANY/ALL CONFLICTS SHALL BE BROUGHT TO THE ATTENTION OF THE CONSTRUCTION MANAGER, PRIOR TO BEGINNING ANY WORK.
9. MINIMUM WIRE SIZE SHALL BE #12 AWG, NOT INCLUDING CONTROL WIRING, UNLESS NOTED OTHERWISE. ALL CONDUCTORS SHALL BE COPPER WITH THWN INSULATION.
10. OUTLET BOXES SHALL BE PRESSED STEEL IN DRY LOCATIONS, CAST ALLOY WITH THREADED HUBS IN WET/DAMP LOCATIONS AND SPECIAL ENCLOSURES FOR OTHER CLASSIFIED AREAS.
11. IT IS NOT THE INTENT OF THESE PLANS TO SHOW EVERY MINOR DETAIL OF THE CONSTRUCTION. CONTRACTOR IS EXPECTED TO FURNISH AND INSTALL ALL ITEMS FOR A COMPLETE ELECTRICAL SYSTEM AND PROVIDE ALL REQUIREMENTS FOR THE EQUIPMENT TO BE PLACED IN PROPER WORKING ORDER.
12. ELECTRICAL SYSTEM SHALL BE AS COMPLETELY AND EFFECTIVELY GROUNDED, AS REQUIRED BY SPECIFICATIONS, SET FORTH BY AT&T.
13. ALL WORK SHALL BE PERFORMED BY A LICENSED ELECTRICAL CONTRACTOR IN A FIRST CLASS, WORKMANLIKE MANNER. THE COMPLETED SYSTEM SHALL BE FULLY OPERATIVE AND SUBJECT TO REGULATORY INSPECTION AND APPROVAL BY CONSTRUCTION MANAGER.
14. ALL WORK SHALL BE COORDINATED WITH OTHER TRADES TO AVOID INTERFERENCE WITH THE PROGRESS OF CONSTRUCTION.
15. CONTRACTOR SHALL GUARANTEE ANY/ALL MATERIALS AND WORK FREE FROM DEFECTS FOR A PERIOD OF NOT LESS THAN ONE YEAR FROM DATE OF ACCEPTANCE.
16. THE CORRECTION OF ANY DEFECTS SHALL BE COMPLETED WITHOUT ANY ADDITIONAL CHARGE AND SHALL INCLUDE THE REPLACEMENT OR THE REPAIR OF ANY OTHER PHASE OF THE INSTALLATION, WHICH MAY HAVE BEEN DAMAGED THEREIN.
17. ADEQUATE AND REQUIRED LIABILITY INSURANCE SHALL BE PROVIDED FOR PROTECTION AGAINST PUBLIC LOSS AND ANY/ALL PROPERTY DAMAGE FOR THE DURATION OF WORK.
18. PROVIDE AND INSTALL CONDUIT, CONDUCTORS, PULL WIRES, BOXES, COVER PLATES AND DEVICES FOR ALL OUTLETS AS INDICATED.
19. DITCHING AND BACK FILL: CONTRACTOR SHALL PROVIDE FOR ALL UNDERGROUND INSTALLED CONDUIT AND/OR CABLES INCLUDING EXCAVATION AND BACKFILLING AND COMPACTION. REFER TO NOTES AND REQUIREMENTS 'EXCAVATION, AND BACKFILLING.
20. MATERIALS, PRODUCTS AND EQUIPMENT, INCLUDING ALL COMPONENTS THEREOF, SHALL BE NEW AND SHALL APPEAR ON THE LIST OF U.L. APPROVED ITEMS AND SHALL MEET OR EXCEED THE REQUIREMENTS OF THE NEC, NEMA AND IECE.
21. CONTRACTOR SHALL SUBMIT SHOP DRAWINGS OR MANUFACTURES CATALOG INFORMATION OF ANY/ALL LIGHTING FIXTURES, SWITCHES AND ALL OTHER ELECTRICAL ITEMS FOR APPROVAL BY THE CONSTRUCTION MANAGER PRIOR TO INSTALLATION.
22. ANY CUTTING OR PATCHING DEEMED NECESSARY FOR ELECTRICAL WORK IS THE ELECTRICAL CONTRACTORS RESPONSIBILITY AND SHALL BE INCLUDED IN THE COST FOR WORK AND PERFORMED TO THE SATISFACTION OF THE 'CONSTRUCTION MANAGER' UPON FINAL ACCEPTANCE.
23. THE ELECTRICAL CONTRACTOR SHALL LABEL ALL PANELS WITH ONLY TYPEWRITTEN DIRECTORIES. ALL ELECTRICAL WIRING SHALL BE THE RESPONSIBILITY OF THE ELECTRICAL CONTRACTOR.
24. DISCONNECT SWITCHES SHALL BE H.P. RATED HEAVY–DUTY, QUICK–MAKE AND QUICK–BREAK ENCLOSURES, AS REQUIRED BY EXPOSURE TYPE.
25. ALL CONNECTIONS SHALL BE MADE WITH A PROTECTIVE COATING OF AN ANTI–OXIDE COMPOUND SUCH AS "NO–OXIDE A" BY DEARBORNE CHEMICAL CO. COAT ALL WIRE SURFACES BEFORE CONNECTING. EXPOSED COPPER SURFACES, INCLUDING GROUND BARS, SHALL BE TREATED – NO SUBSTITUTIONS.
26. RACEWAYS: CONDUIT SHALL BE SCHEDULE 40 PVC MEETING OR EXCEEDING NEMA TC2 – 1990. CONTRACTOR SHALL PLUG AND CAP EACH END OF SPARE AND EMPTY CONDUITS AND PROVIDE TWO SEPARATE PULL STRINGS – 200 LBS TEST POLYETHYLENE CORD. ALL CONDUIT BENDS SHALL BE A MINIMUM OF 2 FT. RADIUS. RGS CONDUITS WHEN SPECIFIED, SHALL MEET UL–6 FOR GALVANIZED STEEL. ALL FITTINGS SHALL BE SUITABLE FOR USE WITH THREADED RIGID CONDUIT. COAT ALL THREADS WITH 'BRITE ZINC' OR 'GOLD GALV'.
27. SUPPORT OF ALL ELECTRICAL WORK SHALL BE AS REQUIRED BY NEC.
28. CONDUCTORS: CONTRACTOR SHALL USE 98% CONDUCTIVITY COPPER WITH TYPE THWN INSULATION, 800 VOLT, COLOR CODED. USE SOLID CONDUCTORS FOR WIRE UP TO AND INCLUDING NO. 8 AWG. USE STRANDED CONDUCTORS FOR WIRE ABOVE NO. 8 AWG.
29. CONNECTORS FOR POWER CONDUCTORS: CONTRACTOR SHALL USE PRESSURE TYPE INSULATED TWIST–ON CONNECTORS FOR NO. 10 AWG AND SMALLER. USE SOLDERLESS MECHANICAL TERMINAL LUGS FOR NO. 8 AWG AND LARGER.
30. SERVICE: 240/120V, SINGLE PHASE, 3 WIRE CONNECTION AVAILABLE FROM UTILITY COMPANY. OWNER OR OWNERS AGENT WILL APPLY FOR POWER.
31. TELEPHONE SERVICE: CONTRACTOR SHALL PROVIDE EMPTY CONDUITS WITH PULL STRINGS AS INDICATED ON DRAWINGS.
32. ELECTRICAL AND TELCO RACEWAYS TO BE BURIED A MINIMUM OF 2' DEPTH.
33. CONTRACTOR SHALL PLACE TWO LENGTHS OF WARNING TAPE AT A DEPTH OF 12" BELOW GROUND AND DIRECTLY ABOVE ELECTRICAL AND TELCO SERVICE CONDUITS. CAUTIONS TAPE TO READ "CAUTION BURIED ELECTRIC" OR "BURIED TELECOMM".
34. ALL BOLTS SHALL BE STAINLESS STEEL

## GROUNDING NOTES:

1. COMPRESSION CONNECTIONS (2), 2 AWG BARE TINNED SOLID COPPER CONDUCTORS TO GROUNDING BAR. ROUTE CONDUCTORS TO BURIED GROUNDING RING AND PROVIDE PARALLEL EXOTHERMIC WELD.
2. EC SHALL USE PERMANENT MARKER TO DRAW THE LINES BETWEEN EACH SECTION AND LABEL EACH SECTION ("P", "A", "N", "T") WITH 1" HIGH LETTERS.
3. ALL HARDWARE 18–8 STAINLESS STEEL, INCLUDING LOCK WASHERS, COAT ALL SURFACES WITH AN ANTI–OXIDANT COMPOUND BEFORE MATING. ALL HARDWARE SHALL BE STAINLESS STEEL 3/8 INCH DIAMETER OR LARGER.
4. FOR GROUND BOND TO STEEL ONLY: INSERT A CADMIUM FLAT WASHER BETWEEN LUG AND STEEL, COAT ALL SURFACES WITH AN ANTI–OXIDANT COMPOUND BEFORE MATING.
5. NUT & WASHER SHALL BE PLACED ON THE FRONT SIDE OF THE GROUNDING BAR AND BOLTED ON THE BACK SIDE.
6. NUMBER OF GROUNDING BARS MAY VARY DEPENDING ON THE TYPE OF TOWER, ANTENNA LOCATION, AND CONNECTION ORIENTATION. PROVIDE AS REQUIRED.
7. WHEN THE SCOPE OF WORK REQUIRES THE ADDITION OF A GROUNDING BAR TO AN EXISTING TOWER,THE SUBCONTRACTOR SHALL OBTAIN APPROVAL FROM THE TOWER OWNER PRIOR TO MOUNTING THE GROUNDING BAR TO THE TOWER.
8. ALL ELECTRICAL AND GROUNDING AT THE CELL SITE SHALL COMPLY WITH THE NATIONAL ELECTRICAL CODE (NEC), NATIONAL FIRE PROTECTION ASSOCIATION (NFPA) 780 (LATEST EDITION), AND MANUFACTURER.

## FOUNDATION, EXCAVATION & BACKFILL NOTES:

1. ALL FINAL GRADED SLOPES SHALL BE A MAXIMUM OF 3 HORIZONTAL TO 1 VERTICAL.
2. ALL EXCAVATIONS PREPARED FOR PLACEMENT OF CONCRETE SHALL BE OF UNDISTURBED SOILS, SUBSTANTIALLY HORIZONTAL AND FREE FROM ANY LOOSE, UNSUITABLE MATERIAL OR FROZEN SOILS, AND WITHOUT THE PRESENCE OF POUNDING WATER. DEWATERING FOR EXCESS GROUND WATER SHALL BE PROVIDED WHEN REQUIRED. COMPACTION OF SOILS UNDER CONCRETE PAD FOUNDATIONS SHALL NOT BE LESS THAN 95% OF THE MODIFIED PROCTOR MAXIMUM DRY DENSITY FOR THE SOIL IN ACCORDANCE WITH ASTM D1557.
3. CONCRETE FOUNDATIONS SHALL NOT BE PLACED ON ORGANIC OR UNSUITABLE MATERIAL. IF INADEQUATE BEARING CAPACITY IS REACHED AT THE DESIGNED EXCAVATION DEPTH, THE UNSATISFACTORY SOIL SHALL BE EXCAVATED TO ITS FULL DEPTH AND EITHER BE REPLACED WITH MECHANICALLY COMPACTED GRANULAR MATERIAL OR THE EXCAVATION SHALL BE FILLED WITH CONCRETE OF THE SAME TYPE SPECIFIED FOR THE FOUNDATION. CRUSHED STONE MAY BE USED TO STABILIZE THE BOTTOM OF THE EXCAVATION. ANY STONE SUB BASE MATERIAL, IF USED, SHALL NOT SUBSTITUTE FOR REQUIRED THICKNESS OF CONCRETE.
4. ALL EXCAVATIONS SHALL BE CLEAN OF UNSUITABLE MATERIAL SUCH AS VEGETATION, TRASH, DEBRIS, AND SO FORTH PRIOR TO BACK FILLING. BACK FILL SHALL CONSIST OF APPROVED MATERIALS SUCH AS EARTH, LOAM, SANDY CLAY, SAND AND GRAVEL, OR SOFT SHALE, FREE FROM CLODS OR LARGE STONES OVER 2 1/2" MAX DIMENSIONS. ALL BACK FILL SHALL BE PLACED IN COMPACTED LAYERS.
5. ALL FILL MATERIALS AND FOUNDATION BACK FILL SHALL BE PLACED IN MAXIMUM 6"THICK LIFTS BEFORE COMPACTION. EACH LIFT SHALL BE WETTED IF REQUIRED AND COMPACTED TO NOT LESS THAN 95% OF THE MODIFIED PROCTOR MAXIMUM DRY DENSITY FOR SOIL IN ACCORDANCE WITH ASTM D1557.
6. NEW LY PLACED CONCRETE FOUNDATIONS SHALL CURE A MINIMUM OF 72 HRS PRIOR TO BACK FILLING.
7. FINISHED GRADING SHALL BE SLOPED TO PROVIDE POSITIVE DRAINAGE AND PREVENT STANDING WATER. THE FINAL (FINISH) ELEVATION OF SLAB FOUNDATIONS SHALL SLOPE AWAY IN ALL DIRECTIONS FROM THE CENTER. FINISH GRADE OF CONCRETE PADS SHALL BE A MAXIMUM OF 4 INCHES ABOVE FINAL FINISH GRADE ELEVATIONS. PROVIDE SURFACE FILL GRAVEL TO ESTABLISH SPECIFIED ELEVATIONS WHERE REQUIRED.
8. NEW LY GRADED SURFACE AREAS TO RECEIVE GRAVEL SHALL BE COVERED WITH GEOTEXTILE FABRIC TYPE: TYPAR–3401 AS MANUFACTURED BY "CONSTRUCTION MATERIAL 1–800–239–3841" OR AN APPROVED EQUIVALENT, SHOWN ON PLANS. THE GEOTEXTILE FABRIC SHALL BE BLACK IN COLOR TO CONTROL THE RECURRENCE OF VEGETATIVE GROWTH AND EXTEND TO WITHIN 1 FOOT OUTSIDE THE SITE FENCING OR ELECTRICAL GROUNDING SYSTEM PERIMETER WHICH EVER IS GREATER. ALL FABRIC SHALL BE COVERED WITH A MINIMUM OF 4" DEEP COMPACTED STONE OR GRAVEL AS SPECIFIED. I.E. FDOT TYPE No. 57 FOR FENCED COMPOUND; FDOT TYPE No. 67 FOR ACCESS DRIVE AREA.
9. IN ALL AREAS TO RECEIVE FILL, REMOVE ALL VEGETATION, TOPSOIL, DEBRIS, WET AND UNSATISFACTORY SOIL MATERIALS, OBSTRUCTIONS, AND DELETERIOUS MATERIALS FROM GROUND SURFACE. PLOW STRIP OR BREAK UP SLOPED SURFACES STEEPER THAN 1 VERTICAL TO 4 HORIZONTAL SUCH THAT FILL MATERIAL WILL BIND WITH EXISTING/PREPARED SOIL SURFACE.
10. WHEN SUB GRADE OR PREPARED GROUND SURFACE HAS A DENSITY LESS THAN THAT REQUIRED FOR THE FILL MATERIAL, SCARIFY THE GROUND SURFACE TO DEPTH REQUIRED, PULVERIZE, MOISTURE–CONDITION AND/OR AERATE THE SOILS AND RECOMPACT TO THE REQUIRED DENSITY PRIOR TO PLACEMENT OF FILLS.
11. IN AREAS WHICH EXISTING GRAVEL SURFACING IS REMOVED OR DISTURBED DURING CONSTRUCTION OPERATIONS, REPLACE GRAVEL SURFACING TO MATCH ADJACENT GRAVEL SURFACING AND RESTORED TO THE SAME THICKNESS AND COMPACTION AS SPECIFIED. ALL RESTORED GRAVEL SURFACING SHALL BE FREE FROM CORRUGATIONS AND WAVES.
12. EXISTING GRAVEL SURFACING MAY BE EXCAVATED SEPARATELY AND REUSED WITH THE CONDITION THAT ANY UNFAVORABLE AMOUNTS OF ORGANIC MATTER, OR OTHER DELETERIOUS MATERIALS ARE REMOVED PRIOR TO REUSE. FURNISH ANY ADDITIONAL GRAVEL RESURFACING MATERIAL AS NEEDED TO PROVIDE A FULL DEPTH COMPACTED SURFACE THROUGHOUT SITE.
13. GRAVEL SUB SURFACE SHALL BE PREPARED TO REQUIRED COMPACTION AND SUB GRADE ELEVATIONS BEFORE GRAVEL SURFACING IS PLACED AND/OR RESTORED. ANY LOOSE OR DISTURBED MATERIALS SHALL BE THOROUGHLY COMPACTED AND ANY DEPRESSIONS IN THE SUB GRADE SHALL BE FILLED AND COMPACTED WITH APPROVED SELECTED MATERIAL. GRAVEL SURFACING MATERIAL SHALL NOT BE USED FOR FILLING DEPRESSIONS IN THE SUB GRADE.
14. PROTECT EXISTING GRAVEL SURFACING AND SUB GRADE IN AREAS WHERE EQUIPMENT LOADS WILL OPERATE. USE PLANKING 'MATTS' OR OTHER SUITABLE PROTECTION DESIGNED TO SPREAD EQUIPMENT LOADS AS MAY BE NECESSARY. REPAIR ANY DAMAGE TO EXISTING GRAVEL SURFACING OR SUB GRADE WHERE SUCH DAMAGE IS DUE TO THE CONTRACTORS OPERATIONS.
15. DAMAGE TO EXISTING STRUCTURES AND/OR UTILITIES RESULTING FROM CONTRACTORS NEGLIGENCE SHALL BE REPAIRED AND/ OR REPLACED TO THE OWNERS SATISFACTION AT NO ADDITIONAL COST TO THE CONTRACT.
16. ALL SUITABLE BORROW MATERIAL FOR BACK FILL OF THE SITE SHALL BE INCLUDED IN THE BID. EXCESS TOPSOIL AND UNSUITABLE MATERIAL SHALL BE DISPOSED OF OFF SITE AT LOCATIONS APPROVED BY GOVERNING AGENCIES AT NO ADDITIONAL COST TO THE CONTRACT.

ISSUED FOR:

KIRKWOOD PLAZA SHOPPING CENTER
1630 W CAMPBELL AVE., CAMPBELL, CA 95008

at&t
5001 EXECUTIVE PARKWAY
SAN RAMON, CALIFORNIA 94583

EPIC WIRELESS GROUP LLC
Connecting a Wireless World

M SQUARED WIRELESS
1387 CALLE AVANZADO
SAN CLEMENTE CA 92673 (949) 391-6824

| | |
|---|---|
| AT&T SITE NO: | CCL01280 |
| PROJECT NO: | 13334607 |
| DRAWN BY: | SD |
| CHECKED BY: | MF |

| REV | DATE | DESCRIPTION | BY |
|---|---|---|---|
| | | | |
| | | | |
| | | | |
| 2 | 12/22/2022 | 100% CD'S REVISED | SP |
| 1 | 12/19/2022 | 100% CD'S FOR SUBMITTAL | BM |
| 0 | 11/30/2022 | 100% CD'S FOR REVIEW | BM |
| C | 02/01/2022 | 95% CD'S REVISED – RLS | BM |
| B | 12/20/2021 | 90% CD'S FOR REV–RLS | DR |
| A | 11/29/2021 | 90% CD'S FOR REVIEW | BM |

LICENSOR:

REGISTERED PROFESSIONAL ENGINEER
WELLS HOLMES
S8203
STRUCTURAL
STATE OF CALIFORNIA

12/22/2022

IT IS A VIOLATION OF LAW FOR ANY PERSON, UNLESS THEY ARE ACTING UNDER THE DIRECTION OF A LICENSED PROFESSIONAL ENGINEER, TO ALTER THIS DOCUMENT.

SHEET TITLE
GENERAL NOTES

SHEET NUMBER
GN-1

# SITE WORK & DRAINAGE

## PART 1 – GENERAL

CLEARING, GRUBBING, STRIPPING, EROSION CONTROL, SURVEY, LAYOUT, SUBGRADE PREPARATION AND FINISH GRADING AS REQUIRED TO COMPLETE THE NEW WORK SHOWN IN THESE PLANS.

1.1 REFERENCES:
A. DOT (STATE DEPARTMENT OF TRANSPORTATION STANDARD SPECIFICATIONS FOR HIGHWAY CONSTRUCTION–CURRENT EDITION).
B. ASTM (AMERICAN SOCIETY FOR TESTING AND MATERIALS).
C. OSHA (OCCUPATION SAFETY AND HEALTH ADMINISTRATION).

1.2 INSPECTION AND TESTING:
A. FIELD TESTING OF EARTHWORK COMPACTION AND CONCRETE CYLINDERS SHALL BE PERFORMED BY SUBCONTRACTORS INDEPENDENT TESTING LAB. THIS WORK TO BE COORDINATED BY THE SUBCONTRACTOR.
B. ALL WORK SHALL BE INSPECTED AND RELEASED BY THE GENERAL CONTRACTOR WHO SHALL CARRY OUT THE GENERAL INSPECTION OF THE WORK WITH SPECIFIC CONCERN TO PROPER PERFORMANCE OF THE WORK AS SPECIFIED AND/OR CALLED FOR ON THE DRAWINGS. IT IS THE SUBCONTRACTOR'S RESPONSIBILITY TO REQUEST TIMELY INSPECTIONS PRIOR TO PROCEEDING WITH FURTHER WORK THAT WOULD MAKE PARTS OF WORK INACCESSIBLE OR DIFFICULT TO INSPECT.

1.3 SITE MAINTENANCE AND PROTECTION:
A. PROVIDE ALL NECESSARY JOB SITE MAINTENANCE FROM COMMENCEMENT OF WORK UNTIL COMPLETION OF THE SUBCONTRACT.
B. AVOID DAMAGE TO THE SITE AND TO EXISTING FACILITIES, STRUCTURES, TREES, AND SHRUBS DESIGNATED TO REMAIN. TAKE PROTECTIVE MEASURES TO PREVENT EXISTING FACILITIES THAT ARE NOT DESIGNATED FOR REMOVAL FROM BEING DAMAGED BY THE WORK.
C. KEEP SITE FREE OF ALL PONDING WATER.
D. PROVIDE EROSION CONTROL MEASURES IN ACCORDANCE WITH STATE DOT AND EPA REQUIREMENTS.
E. PROVIDE AND MAINTAIN ALL TEMPORARY FENCING, BARRICADES, WARNING SIGNALS AND SIMILAR DEVICES NECESSARY TO PROTECT AGAINST THEFT FROM PROPERTY DURING THE ENTIRE PERIOD OF CONSTRUCTION. REMOVE ALL SUCH DEVICES UPON COMPLETION OF THE WORK.
F. EXISTING UTILITIES: DO NOT INTERRUPT EXISTING UTILITIES SERVING FACILITIES OCCUPIED BY THE OWNER OR OTHERS, EXCEPT WHEN PERMITTED IN WRITING BY THE ENGINEER AND THEN ONLY AFTER ACCEPTABLE TEMPORARY UTILITY SERVICES HAVE BEEN PROVIDED.

- PROVIDE A MINIMUM 48–HOUR NOTICE TO THE ENGINEER AND RECEIVE WRITTEN NOTICE TO PROCEED BEFORE INTERRUPTING ANY UTILITY SERVICE.

## PART 2 – PRODUCTS

2.1 SUITABLE BACKFILL: ASTM D2321 (CLASS I, II, III OR IVA) FREE FROM FROZEN LUMPS, REFUSE,STONES OR ROCKS LARGER THAN 3 INCHES IN ANY DIMENSION OR OTHER MATERIAL THAT MAY MAKE THE INORGANIC MATERIAL UNSUITABLE FOR BACKFILL.
2.2 NON–POROUS GRANULAR EMBANKMENT AND BACKFILL: ASTM D2321 (CLASS III, IVA OR IVB) COARSE AGGREGATE. FREE FROM FROZEN LUMPS, REFUSE, STONES OR ROCKS LARGER THAN 3 INCHES IN ANY DIMENSION OR OTHER MATERIAL THAT MAY MAKE THE INORGANIC MATERIAL UNSUITABLE FOR BACKFILL.
2.3 POROUS GRANULAR EMBANKMENT AND BACKFILL: ASTM D2321 (CLASS IA, IB OR II) COARSE AGGREGATE FREE FROM FROZEN LUMPS, REFUSE, STONES OR ROCKS LARGER THAN 3 INCHES IN ANY DIMENSION OR OTHER MATERIAL THAT MAY MAKE THE INORGANIC MATERIAL UNSUITABLE FOR BACKFILL.
2.4 SELECT STRUCTURAL FILL: GRANULAR FILL MATERIAL MEETING THE REQUIREMENTS OF ASTM E850–95. FOR USE AROUND AND UNDER STRUCTURES WHERE STRUCTURAL FILL MATERIAL ARE REQUIRED.
2.5 GRANULAR BEDDING AND TRENCH BACKFILL: WELL–GRADED SAND MEETING THE GRADATION REQUIREMENTS OF ASTM D2487 (SE OR SW–SM).
2.6 COARSE AGGREGATE FOR ACCESS ROAD SUBBASE COURSE SHALL CONFORM TO ASTM D2940.
2.7 UNSUITABLE MATERIAL: HIGH AND MODERATELY PLASTIC SILTS AND CLAYS (LL>45). MATERIAL CONTAINING REFUSE, FROZEN LUMPS, DEMOLISHED BITUMINOUS MATERIAL, VEGETATIVE MATTER, WOOD, STONES IN EXCESS OF 3 INCHES IN ANY DIMENSION, AND DEBRIS AS DETERMINED BY THE CONSTRUCTION MANAGER. TYPICAL THESE WILL BE SOILS CLASSIFIED BY ASTM AS PT, MH, CH, OH, ML, AND OL.
2.8 GEOTEXTILE FABRIC: MIRAFI 500X OR APPROVED EQUAL.
2.9 PLASTIC MARKING TAPE: SHALL BE ACID AND ALKALI RESISTANT POLYETHYLENE FILM SPECIFICALLY MANUFACTURED FOR MARKING AND LOCATING UNDERGROUND UTILITIES, 6 INCHES WIDE WITH A MINIMUM THICKNESS OF 0.004 INCH. TAPE SHALL HAVE MINIMUM STRENGTH OF 1500 PSI IN BOTH DIRECTIONS AND MANUFACTURED WITH INTEGRAL CONDUCTORS, FOIL BACKING OR OTHER MEANS TO ENABLE DETECTION BY A METAL DETECTOR WHEN BURIED UP TO 3 FEET DEEP. THE METALLIC CORE OF THE TAPE SHALL BE ENCASED IN A PROTECTIVE JACKET OR PROVIDED WITH OTHER MEANS TO PROTECT IT FROM CORROSION. TAPE COLOR SHALL BE RED FOR ELECTRIC UTILITIES AND ORANGE FOR TELECOMMUNICATION UTILITIES.

## PART 2 – EXECUTION

3.1 GENERAL:

A. BEFORE STARTING GENERAL SITE PREPARATION ACTIVITIES, INSTALL EROSION AND SEDIMENT CONTROL MEASURES. THE WORK AREA SHALL BE CONSTRUCTED AND MAINTAINED IN SUCH CONDITION THAT IN THE EVENT OF RAIN THE SITE WILL BE DRAINED AT ANY TIME.
B. BEFORE ALL SURVEY, LAYOUT, STAKING, AND MARKING, ESTABLISH AND MAINTAIN ALL LINES, GRADES, ELEVATIONS AND BENCHMARKS NEEDED FOR EXECUTION OF THE WORK.
C. CLEAR AND GRUB THE AREA WITHIN THE LIMITS OF THE SITE. REMOVE TREES, BRUSH, STUMPS,RUBBISH AND OTHER DEBRIS AND VEGETATION RESTING ON OR PROTRUDING THROUGH THE SURFACE OF THE SITE AREA TO BE CLEARED.

1. REMOVE THE FOLLOWING MATERIALS TO A DEPTH OF NO LESS THAN 12 INCHES BELOW THE ORIGINAL GROUND SURFACE: ROOTS, STUMPS, AND OTHER DEBRIS, BRUSH, AND REFUSE EMBEDDED IN OR PROTRUDING THROUGH THE GROUND SURFACE, RAKE, DISK OR PLOW THE AREA TO A DEPTH OF NO LESS THAN 6 INCHES, AND REMOVE TO A DEPTH OF 12 INCHES ALL ROOTS AND OTHER DEBRIS THEREBY EXPOSED.
2. REMOVE TOPSOIL MATERIAL COMPLETELY FROM THE SURFACE UNTIL THE SOIL NO LONGER MEETS THE DEFINITION OF TOPSOIL. AVOID MIXING TOPSOIL WITH SUBSOIL OR OTHER UNDESIRABLE MATERIALS.
3. EXCEPT WHERE EXCAVATION TO GREATER DEPTH IS INDICATED, FILL DEPRESSIONS RESULTING FROM CLEARING, GRUBBING AND DEMOLITION WORK COMPLETELY WITH SUITABLE FILL.
D. REMOVE FROM THE SITE AND DISPOSE IN AN AUTHORIZED LANDFILL ALL DEBRIS RESULTING FROM CLEARING AND GRUBBING OPERATIONS. BURNING WILL NOT BE PERMITTED.
E. PRIOR TO EXCAVATING, THOROUGHLY EXAMINE THE AREA TO BE EXCAVATED AND/OR TRENCHED TO VERIFY THE LOCATIONS OF FEATURES INDICATED ON THE DRAWINGS AND TO ASCERTAIN THE EXISTENCE AND LOCATION OF ANY STRUCTURE, UNDERGROUND STRUCTURE, OR OTHER ITEM NOT SHOWN THAT MIGHT INTERFERE WITH THE NEW CONSTRUCTION. NOTIFY THE CONSTRUCTION MANAGER OF ANY OBSTRUCTIONS THAT WILL PREVENT ACCOMPLISHMENT OF THE WORK AS INDICATED ON THE DRAWINGS.
F. SEPARATE AND STOCK PILE ALL EXCAVATED MATERIALS SUITABLE FOR BACKFILL. ALL EXCESS EXCAVATED AND UNSUITABLE MATERIALS SHALL BE DISPOSED OF OFF–SITE IN A LEGAL MANNER.

3.2 BACKFILL:
A. AS SOON AS PRACTICAL, AFTER COMPLETING CONSTRUCTION OF THE RELATED STRUCTURE, INCLUDING EXPIRATION OF THE SPECIFIED MINIMUM CURING PERIOD FOR CAST–IN–PLACE CONCRETE, BACKFILL THE EXCAVATION WITH APPROVED MATERIAL TO RESTORE THE REQUIRED FINISHED GRADE.
1. PRIOR TO PLACING BACKFILL AROUND STRUCTURES, ALL FORMS SHALL BE REMOVED AND THE EXCAVATION CLEANED OF ALL TRASH, DEBRIS, AND UNSUITABLE MATERIALS.
2. BACKFILL BY PLACING AND COMPACTING SUITABLE BACKFILL MATERIAL OR SELECT GRANULAR BACKFILL MATERIAL WHEN REQUIRED IN UNIFORM HORIZONTAL LAYERS OF NO GREATER THAN 8–INCHES LOOSE THICKNESS AND COMPACTED. WHERE HAND OPERATED COMPACTORS ARE USED, THE FILL MATERIAL SHALL BE PLACED IN LIFTS NOT TO EXCEED 4 INCHES IN LOOSE DEPTH AND COMPACTED.
3. WHENEVER THE DENSITY TESTING INDICATES THAT THE CONTRACTOR HAS NOT OBTAINED THE SPECIFIED DENSITY, THE SUCCEEDING LAYER SHALL NOT BE PLACED UNTIL THE SPECIFICATION REQUIREMENTS ARE MET UNLESS OTHERWISE AUTHORIZED BY THE GEOTECHNICAL ENGINEER. THE CONTRACTOR SHALL TAKE WHATEVER APPROPRIATE ACTION IS NECESSARY, SUCH AS DISKING AND DRYING, ADDING WATER, OR INCREASING THE COMPACTIVE EFFORT TO MEET THE MINIMUM COMPACTION REQUIREMENTS.
B. THOROUGHLY COMPACT EACH LAYER OF BACKFILL TO A MINIMUM OF 95% OF THE MAXIMUM DRY DENSITY AS PROVIDED BY THE STANDARD PROCTOR TEST, ASTM D 698.

3.3 TRENCH EXCAVATION:

A. UTILITY TRENCHES SHALL BE EXCAVATED TO THE LINES AND GRADES SHOWN ON THE DRAWINGS OR AS DIRECTED BY THE GENERAL CONTRACTOR. PROVIDE SHORING, SHEETING AND BRACING AS REQUIRED TO PREVENT CAVING OR SLOUGHING OF THE TRENCH WALLS. EXTEND THE TRENCH WIDTH A MINIMUM OF 6 INCHES BEYOND THE OUTSIDE EDGE OF THE OUTERMOST CONDUIT.

B. WHEN SOFT YIELDING, OR OTHERWISE UNSTABLE SOIL CONDITIONS ARE ENCOUNTERED, BACKFILL AT THE REQUIRED TRENCH TO A DEPTH OF NO LESS THAN 12 INCHES BELOW THE REQUIRED ELEVATION AND BACKFILL WITH GRANULAR BEDDING MATERIAL.

3.5 AGGREGATE ACCESS ROAD:
A. CLEAR, GRUB, STRIP AND EXCAVATE FOR THE ACCESS ROAD TO THE LINES AND GRADES INDICATED ON THE DRAWINGS. SCARIFY TO A DEPTH OF 6 INCHES AND PROOF–ROLL. ALL HOLES, RUTS, SOFT PLACES AND OTHER DEFECTS SHALL BE CORRECTED.
B. THE ENTIRE SUBGRADE SHALL BE COMPACTED TO NOT LESS THAN 95 PERCENT OF THE MAXIMUM DRY DENSITY AS PROVIDED BY THE STANDARD PROCTOR TEST, ASTM D 1557.
C. AFTER PREPARATION OF THE SUBGRADE IS COMPLETE THE GEOTEXTILE FABRIC (MIRAFI 500X) SHALL BE INSTALLED TO THE LIMITS INDICATED ON THE DRAWINGS BY ROLLING THE FABRIC OUT LONGITUDINALLY ALONG THE ROADWAY. THE FABRIC SHALL NOT BE DRAGGED ACROSS THE SUBGRADE. PLACE THE ENTIRE ROLL IN A SINGLE OPERATION, ROLLING OUT AS SMOOTHLY AS POSSIBLE.
1. OVERLAPS PARALLEL TO THE ROADWAY WILL BE PERMITTED AT THE CENTERLINE AND AT LOCATIONS BEYOND THE ROADWAY SURFACE WIDTH (I.E. WITHIN THE SHOULDER WIDTH) ONLY. NO LONGITUDINAL OVERLAPS SHALL BE LOCATED BETWEEN THE CENTERLINE AND THE SHOULDER. PARALLEL OVERLAPS SHALL BE A MINIMUM OF 3 FEET WIDE.
2. TRANSVERSE (PERPENDICULAR TO THE ROADWAY) OVERLAPS AT THE END OF A ROLL SHALL OVERLAP IN THE DIRECTION OF THE AGGREGATE PLACEMENT (PREVIOUS ROLL ON TOP) AND SHALL HAVE A MINIMUM LENGTH OF 3 FEET.
3. ALL OVERLAPS SHALL BE PINNED WITH STAPLES OR NAILS A MINIMUM OF 10 INCHES LONG TO INSURE POSITIONING DURING PLACEMENT OF AGGREGATE. PIN LONGITUDINAL SEAMS AT 25 FOOT CENTERS AND TRANSVERSE SEAMS EVERY 5 FEET.
D. THE AGGREGATE BASE AND SURFACE COURSES SHALL BE CONSTRUCTED IN LAYERS NOT MORE THAN 4 INCH (COMPACTED) THICKNESS. AGGREGATE TO BE PLACED ON GEOTEXTILE FABRIC SHALL BE END–DUMPED ON THE FABRIC FROM THE FREE END OF THE FABRIC OR OVER PREVIOUSLY PLACED AGGREGATE. THE FIRST LIFT SHALL BE BLADED DOWN TO A THICKNESS OF 8 INCHES PRIOR TO COMPACTION. AT NO TIME SHALL EQUIPMENT, EITHER TRANSPORTING THE AGGREGATE OR GRADING THE AGGREGATE, BE PERMITTED ON THE ROADWAY WITH LESS THAN 4 INCHES OF MATERIAL COVERING THE FABRIC.
E. THE AGGREGATE SHALL BE IMMEDIATELY COMPACTED TO NOT LESS THAN 95 PERCENT OF THE MAXIMUM DRY DENSITY AS PROVIDED BY THE PROCTOR TEST, ASTM D 1557 WITH A TAMPING ROLLER, OR WITH A PNEUMATIC–TIRED ROLLER, OR WITH A VIBRATORY MACHINE OR ANY COMBINATION OF THE ABOVE. THE TOP LAYER SHALL BE GIVEN A FINAL ROLLING WITH A THREE–WHEEL OR TANDEM ROLLER.

3.6 FINISH GRADING:
A. PERFORM ALL GRADING TO PROVIDE POSITIVE DRAINAGE AWAY FROM STRUCTURES AND SMOOTH, EVEN SURFACE DRAINAGE OF THE ENTIRE AREA WITHIN THE LIMITS OF CONSTRUCTION. GRADING SHALL BE COMPATIBLE WITH ALL SURROUNDING TOPOGRAPHY AND STRUCTURES.
B. UTILIZE SATISFACTORY FILL MATERIAL RESULTING FROM THE EXCAVATION WORK IN THE CONSTRUCTION OF FILLS, EMBANKMENTS AND FOR REPLACEMENT OF REMOVED UNSUITABLE MATERIALS.
C. ACHIEVE FINISHED GRADE BY PLACING A MINIMUM OF 4 INCHES OF 1/2" – 3/4" CRUSHED STONE ON TOP SOIL STABILIZER FABRIC.
D. REPAIR ALL ACCESS ROADS AND SURROUNDING AREAS USED DURING THE COURSE OF THIS WORK TO THEIR ORIGINAL CONDITION.

3.7 ASPHALT PAVING ROAD:
A. DIVISION 600 – KDOT FLEXIBLE PAVEMENT. (UPDATE PER LOCAL DOT)
B. SECTION 403 – MODOT ASPHALT CONCRETE PAVEMENT.

# ENVIRONMENTAL NOTES

1. ALL WORK PERFORMED SHALL BE DONE IN ACCORDANCE WITH ISSUED PERMITS. THE CONTRACTOR SHALL BE RESPONSIBLE FOR PAYMENT OF FINES AND PROPER CLEAN UP FOR AREAS IN VIOLATION.
2. CONTRACTOR AND/OR DEVELOPER SHALL BE RESPONSIBLE FOR CONSTRUCTION AND MAINTENANCE OF EROSION AND SEDIMENTATION CONTROLS DURING CONSTRUCTION FOR PROTECTION OF ADJACENT PROPERTIES, ROADWAYS AND WATERWAYS AND SHALL BE MAINTAINED IN PLACE THROUGH FINAL JURISDICTIONAL INSPECTION & RELEASE OF SITE.
3. CONTRACTOR SHALL INSTALL/CONSTRUCT ALL NECESSARY SEDIMENT/SILT CONTROL FENCING AND PROTECTIVE MEASURES WITHIN THE LIMITS OF SITE DISTURBANCE PRIOR TO CONSTRUCTION.
4. NO SEDIMENT SHALL BE ALLOWED TO EXIT THE PROPERTY. THE CONTRACTOR IS RESPONSIBLE FOR TAKING ADEQUATE MEASURES FOR CONTROLLING EROSION. ADDITIONAL SEDIMENT CONTROL FENCING MAY BE REQUIRED IN ANY AREAS SUBJECT TO EROSION.
5. CONTRACTOR SHALL BE RESPONSIBLE FOR DAILY INSPECTIONS AND ANY REPAIRS OF ALL SEDIMENT CONTROL MEASURES INCLUDING SEDIMENT REMOVAL AS NECESSARY.
6. CLEARING OF VEGETATION AND TREE REMOVAL SHALL BE ONLY AS PERMITTED AND BE HELD TO A MINIMUM. ONLY TREES NECESSARY FOR CONSTRUCTION OF THE FACILITIES SHALL BE REMOVED.
7. SEEDING AND MULCHING AND/OR SODDING OF THE SITE WILL BE ACCOMPLISHED AS SOON AS POSSIBLE AFTER COMPLETION OF THE PROJECT FACILITIES AFFECTING LAND DISTURBANCE.
8. CONTRACTOR SHALL PROVIDE ALL EROSION AND SEDIMENTATION CONTROL MEASURES AS REQUIRED BY LOCAL, COUNTY AND STATE CODES AND ORDINANCES TO PROTECT EMBANKMENTS FROM SOIL LOSS AND TO PREVENT ACCUMULATION OF SOIL AND SILT IN STREAMS AND DRAINAGE PATHS LEAVING THE CONSTRUCTION AREA. THIS MAY INCLUDE SUCH MEASURES AS SILT FENCES, STRAW BALE SEDIMENT BARRIERS, AND CHECK DAMS.
9. RIP RAP OF SIZES INDICATED SHALL CONSIST OF CLEAN, HARD, SOUND, DURABLE, UNIFORM IN QUALITY STONE FREE OF ANY DETRIMENTAL QUANTITY OF SOFT, FRIABLE, THIN, ELONGATED OR LAMINATED PIECES, DISINTEGRATED MATERIAL, ORGANIC MATTER, OIL, ALKALI, OR OTHER DELETERIOUS SUBSTANCES

# CONCRETE NOTES

1. MIX DESIGN REQUIREMENTS: (UNLESS NOTED OTHERWISE)
   A. CEMENT SHALL CONFORM TO ASTM C–150, TYPE II
   B. COMPRESSIVE STRENGTH = 2,500 PSI
   C. CONCRETE SLUMP SHALL BE 3"+/–1" FOR SLABS AND 4"+/–1" FOR ALL OTHER WORK
   D. WATER CEMENT RATIO = 0.46 MAX
2. AGGREGATES FOR NORMAL WEIGHT CONCRETE SHALL CONFORM TO ASTM C–33 (1" MAXIMUM SIZE), AND ASTM C–330 FOR STRUCTURAL LIGHT WEIGHT CONCRETE.
3. WHERE CONCRETE WILL BE IN CONTACT WITH NATIVE OR IMPORTED SOIL WHICH HAS A VERY SEVERE SULFATE CONTENT, POZZOLAN SHALL BE ADDED AS REQUIRED.
4. EXTERIOR CONCRETE EXPOSED TO FREEZING TEMPERATURES AND/OR SALT OR DEICING CHEMICALS SHALL HAVE AIR ENTRAINMENT AND THE CEMENT CONTENT APPROPRIATE FOR THE EXPECTED EXPOSURE.
5. WATER SHALL BE POTABLE OR CLEAN, FREE FROM DELETERIOUS AMOUNTS OF ACIDS, ALKALIS OR ORGANIC MATERIALS, OILS, AND SALTS.
6. READY–MIX CONCRETE SHALL BE MIXED AND DELIVERED IN ACCORDANCE WITH ASTM C–94.
7. FLOOR SLABS SHALL CONFORM TO ASTM C–38 STANDARDS AND SHALL BE AT LEAST 3 1/2 INCHES THICK – SEE FOUNDATION PLANS FOR REINFORCEMENT, BASE, UNDERLAYMENT, VAPOR BARRIER OR OTHER SPECIFIC REQUIREMENTS.
8. FLOOR SLABS SHALL BE LEVEL OR TRUE SLOPES AS SHOWN ON DRAWINGS. TOLERANCE: 1/8 INCH IN 10 FEET
9. PROVIDE LIGHT BROOM FINISH ON ALL EXPOSED CONCRETE UNLESS NOTED OTHERWISE.
10. PRIOR TO COMMENCING ANY FOUNDATION WORK, COORDINATE WORK WITH ANY EXISTING UTILITIES. FOUNDATIONS SHALL BE LOWERED WHERE REQUIRED TO AVOID UTILITIES.
11. ALL EDGES OF PERMANENTLY EXPOSED CONCRETE SURFACES SHALL BE CHAMFERED 3/4" UNLESS NOTED OTHERWISE.
12. FORMWORK SHALL REMAIN PLACE UNTIL CONCRETE HAS OBTAINED AT LEAST 90% OF COMPRESSIVE STRENGTH. THE CONTRACTOR SHALL PROVIDE ALL SHORING AND RESHORING.
13. PROVIDE CONCRETE SLABS OVER A 10 MIL POLYETHYLENE VAPOR BARRIER OVER 4" OF POROUS FILL UNLESS NOTED OTHERWISE.
14. ALL POROUS FILL MATERIAL SHALL BE A CLEAN GRANULAR MATERIAL. POROUS FILL SHALL BE COMPACTED TO 90% MAX. DRY DENSITY.
15. WALKWAYS AND OTHER EXTERIOR SLABS ARE NOT INDICATED ON THE STRUCTURAL DRAWINGS. SEE THE SITE PLAN AND ARCHITECTURAL DRAWINGS FOR LOCATIONS, DIMENSIONS, ELEVATIONS, JOINTING DETAILS AND FINISH DETAILS. PROVIDE 4" WALKS REINFORCED WITH 6X6 – W1.4XW1.4 WWF UNLESS OTHERWISE NOTED.
16. ALL CONCRETE MATERIALS AND WORKMANSHIP SHALL CONFORM TO CHAPTER 19 OF THE CBC AND TO ALL REQUIREMENTS OF ACI 301, "SPECIFICATIONS FOR STRUCTURAL CONCRETE FOR BUILDINGS," EXCEPT AS SPECIFIED HEREIN.
17. ALL FOOTINGS SHALL REST ON FIRM NATURAL SOIL OR APPROVED COMPACTED FILL.
18. MONOPOLE CAISSONS ARE DESIGNED BY OTHERS. PROVIDE ADEQUATE SEPARATION AND/OR COMPRESSIBLE MATERIAL AROUND THE TOP OF THE CAISSON AS DIRECTED BY THE CAISSON ENGINEER TO PROTECT ADJACENT NEW AND EXISTING FOUNDATIONS AND OTHER ELEMENTS.
19. CONTROL JOINTS SHALL BE PLACED IN ALL CONCRETE SLABS PER THE SCHEDULE BELOW. SAWCUT WITHIN 4 HOURS AFTER THE POUR USING THE "SOFF–CUT" PROCEDURE.

| SLAB THICKNESS | MAXIMUM SPACING |
|---|---|
| 4" | 10'–0" |
| 5" | 12'–0" |
| 6" AND LARGE | 15'–0" |

# REINFORCING STEEL NOTES

1. ALL REINFORCING SHALL BE NEW DEFORMED BARS CONFORMING TO ASTM A615, GRADE 60 OR ASTM A706, GRADE 60. ALL WELDED REINFORCING BARS SHALL CONFORM TO ASTM A706.
2. REINFORCING STEEL SPLICE/DEVELOPMENT LENGTHS SHALL CONFORM TO THE FOLLOWING MINIMUM LENGTHS UNLESS NOTED OTHERWISE: SPLICED BARS SHALL BE WIRED TOGETHER.

SPLICE/DEVELOPMENT LENGTH (INCHES)

| BAR SIZE | TOP BAR | OTHER BAR |
|---|---|---|
| #3 | 28 | 22 |
| #4 | 37 | 29 |
| #5 | 47 | 36 |
| #6 | 56 | 43 |
| #7 | 81 | 63 |
| #8 | 93 | 72 |
| #9 | 105 | 81 |
| #10 | 116 | 89 |

THE BAR LENGTHS APPLY TO HORIZONTAL REINFORCEMENT PLACED WITH MORE THAN 12" OF FRESH CONCRETE CAST BELOW THE SPLICE OR DEVELOP LENGTH. COMPRESSION DOWEL EMBEDMENT: 22 BAR DIAMETERS. LAP WELDED WIRE FABRIC ONE SPACING OF CROSS WIRES PLUS 2"

3. MINIMUM CONCRETE COVER UNLESS NOTED OTHERWISE:

| | | |
|---|---|---|
| UNFORMED SURFACE IN CONTACT WITH THE GROUND: | | 3" |
| FORMED SURFACES EXPOSED TO EARTH OR WEATHER | | |
| | #6 BARS AND LARGER: | 2" |
| | #5 BARS AND SMALLER: | 1.5" |
| FORMED SURFACES NOT EXPOSED TO EARTH OR WEATHER | | |
| | BEAMS, GIRDERS AND COLUMNS: | 1.5" |
| | SLABS, WALLS AND JOISTS | |
| | #11 BARS AND SMALLER: | 0.75" |

4. BARS SHALL BE CLEAN OF MUD, OIL, OR OTHER COATINGS LIKELY TO IMPAIR BONDING.
5. ALL REINFORCING SHALL BE SECURED IN PLACE PRIOR TO INSPECTIONS, PLACING CONCRETE, OR GROUTING MASONRY.
6. WELDING: BARS SHALL NOT BE WELDED UNLESS AUTHORIZED. WHEN AUTHORIZED, CONFORM TO ACI 301 SEC 3.2, 2.2, AND AWS D1.4 "WELDING" AND PROVIDE ASTM A706, GRADE 60 REINFORCEMENT.
7. FIELD BENDING: CONFORM TO ACI 301 SEC 3.3.2.8 "FIELD BENDING OR STRAIGHTENING". BAR SIZES #3 THROUGH #5 MAY BE FIELD BENT COLD THE FIRST TIME. OTHER BARS REQUIRE PREHEATING. DO NOT TWIST BARS.
8. SPLICE ALL BARS IN MASONRY WITH A MINIMUM OF 46 BAR DIAMETER LAPS (2'–0" MINIMUM).
9. ALL VERTICAL WALL REINFORCEMENT SHALL BE CONTINUOUS BETWEEN SPLICE LOCATIONS SHOWN IN THE DETAILS.

ISSUED FOR:
KIRKWOOD PLAZA SHOPPING CENTER
1630 W CAMPBELL AVE., CAMPBELL, CA 95008

at&t
5001 EXECUTIVE PARKWAY
SAN RAMON, CALIFORNIA 94583

EPIC WIRELESS GROUP LLC
Connecting a Wireless World

M SQUARED WIRELESS
1387 CALLE AVANZADO
SAN CLEMENTE CA 92673 (949) 391-6824

| | |
|---|---|
| AT&T SITE NO: | CCL01280 |
| PROJECT NO: | 13334607 |
| DRAWN BY: | SD |
| CHECKED BY: | MF |

| REV | DATE | DESCRIPTION | BY |
|---|---|---|---|
| | | | |
| | | | |
| | | | |
| 2 | 12/22/2022 | 100% CD'S REVISED | SP |
| 1 | 12/19/2022 | 100% CD'S FOR SUBMITTAL | BM |
| 0 | 11/30/2022 | 100% CD'S FOR REVIEW | BM |
| C | 02/01/2022 | 95% CD'S REVISED – RLS | BM |
| B | 12/20/2021 | 90% CD'S FOR REV–RLS | DR |
| A | 11/29/2021 | 90% CD'S FOR REVIEW | BM |

LICENSOR:

REGISTERED PROFESSIONAL ENGINEER
WELLS HOLMES
S 6203
STRUCTURAL
STATE OF CALIFORNIA
12/22/2022

IT IS A VIOLATION OF LAW FOR ANY PERSON, UNLESS THEY ARE ACTING UNDER THE DIRECTION OF A LICENSED PROFESSIONAL ENGINEER, TO ALTER THIS DOCUMENT.

SHEET TITLE
GENERAL NOTES

SHEET NUMBER
GN-2

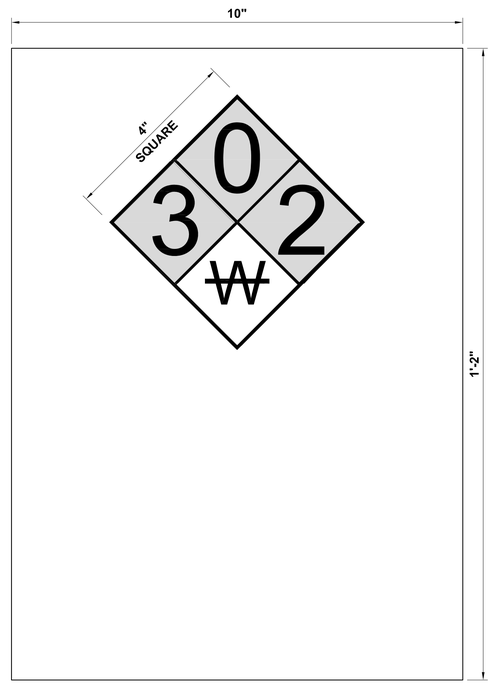


REQUIRED BATTERY NFPA SIGNAGE

## SITE IDENTIFICATION SIGNAGE

24"x36" SCALE: NTS
11"x17" SCALE: NTS

4

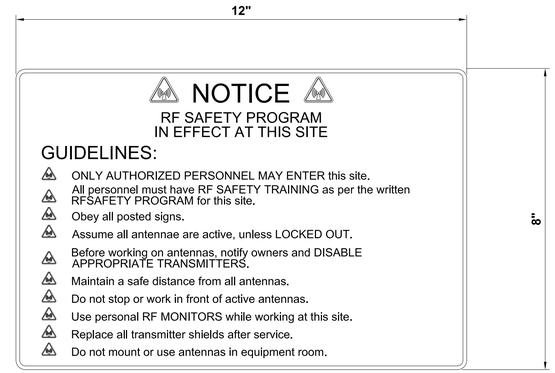


## RF SIGNAGE

24"x36" SCALE: NTS
11"x17" SCALE: NTS

1

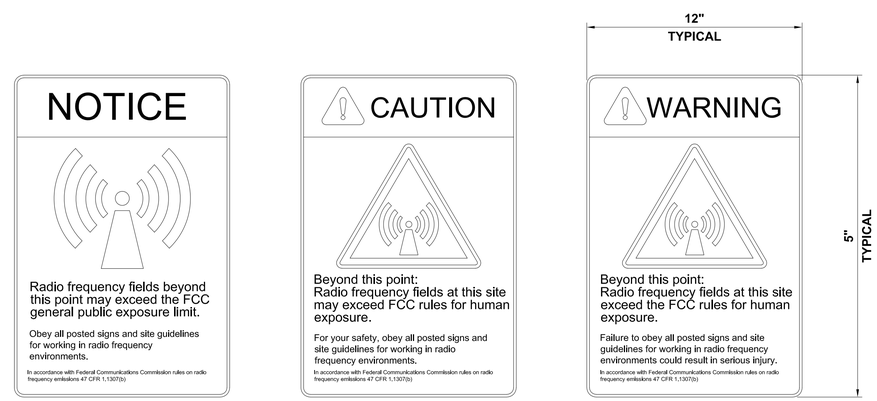


## RF SIGNAGE

24"x36" SCALE: NTS
11"x17" SCALE: NTS

2

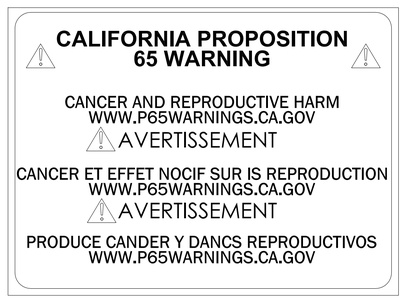


## PROP 65

24"x36" SCALE: NTS
11"x17" SCALE: NTS

5

## NO TRESPASSING SIGNAGE

24"x36" SCALE: NTS
11"x17" SCALE: NTS

3

ISSUED FOR:
KIRKWOOD PLAZA
SHOPPING CENTER
1630 W CAMPBELL AVE.,
CAMPBELL, CA 95008

at&t
5001 EXECUTIVE PARKWAY
SAN RAMON, CALIFORNIA 94583

EPIC WIRELESS GROUP LLC
Connecting a Wireless World

M SQUARED WIRELESS
1387 CALLE AVANZADO
SAN CLEMENTE CA 92673 (949) 391-6824

| | |
|---|---|
| AT&T SITE NO: | CCL01280 |
| PROJECT NO: | 13334607 |
| DRAWN BY: | SD |
| CHECKED BY: | MF |

| REV | DATE | DESCRIPTION | BY |
|---|---|---|---|
| 2 | 12/22/2022 | 100% CD'S REVISED | SP |
| 1 | 12/19/2022 | 100% CD'S FOR SUBMITTAL | BM |
| 0 | 11/30/2022 | 100% CD'S FOR REVIEW | BM |
| C | 02/01/2022 | 95% CD'S REVISED – RLS | BM |
| B | 12/20/2021 | 90% CD'S FOR REV-RLS | DR |
| A | 11/29/2021 | 90% CD'S FOR REVIEW | BM |

LICENSOR:

REGISTERED PROFESSIONAL ENGINEER
WELLS HOLMES
S 6203
STRUCTURAL
STATE OF CALIFORNIA

12/22/2022

IT IS A VIOLATION OF LAW FOR ANY PERSON, UNLESS THEY ARE ACTING UNDER THE DIRECTION OF A LICENSED PROFESSIONAL ENGINEER, TO ALTER THIS DOCUMENT.

SHEET TITLE
GENERAL NOTES

SHEET NUMBER
GN-3

Lease Area Description

All that certain lease area being a portion of that certain Parcel 4 as is on that certain Parcel Map filed for record at Book 672 of Parcel Maps at Page 39, Santa Clara County Records, located in the City of Campbell, County of Santa Clara, State of California, and being more particularly described as follows:

Commencing at an iron pipe monument in box set for the centerline intersection of Whitwood Lane and Winslow Court as is shown on the above referenced map, from which a similar monument bears North 87°30'15" East 328.00 feet; thence from said point of commencement North xxxx feet to a point on the roof of an existing building and the True Point of Beginning; thence from said True Point of Beginning North xxxx feet to the point of beginning.

Together with non-exclusive easements for access and utility purposes as are necessary from and between the above described lease areas and running thence in, on, over, and through the underlying building and parcel as is generally shown hereon to the public right of way more commonly known as Campbell Avenue.

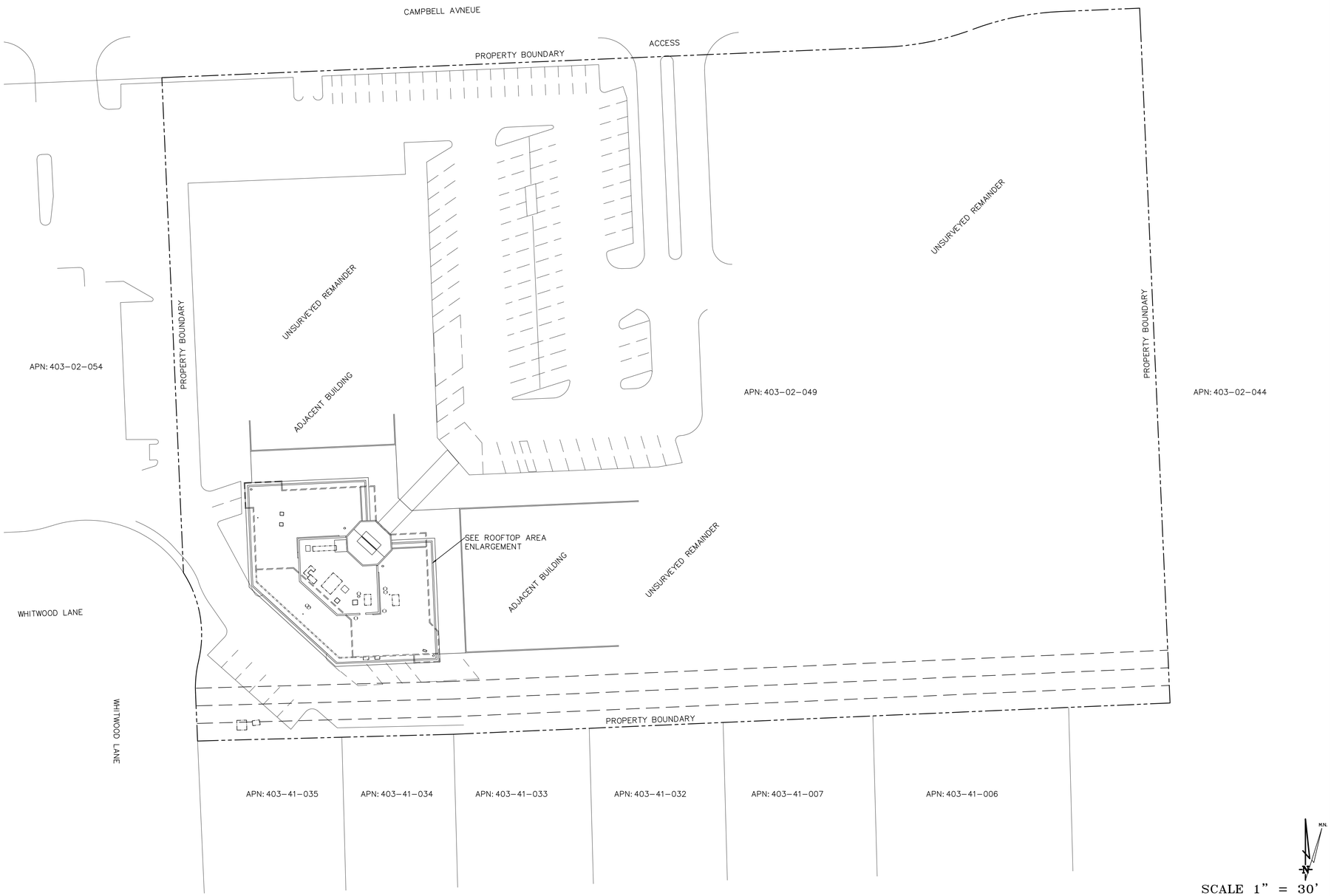


OVERALL SITE PLAN

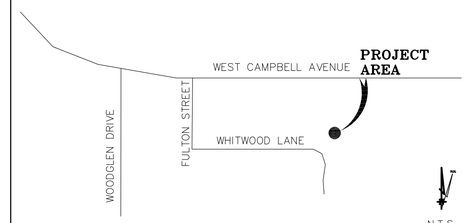


CAMPBELL, CA

VICINITY MAP

THESE DRAWINGS AND/OR THE ACCOMPANYING SPECIFICATION AS INSTRUMENTS OF SERVICE, ARE THE EXCLUSIVE PROPERTY OF GEIL ENGINEERING AND THEIR USE AND PUBLICATION SHALL BE RESTRICTED TO THE ORIGINAL SITE AND CARRIER FOR WHICH THEY ARE PREPARED. REUSE, REPRODUCTION OR PUBLICATION BY ANY METHOD, IN WHOLE OR IN PART, IS PROHIBITED EXCEPT BY WRITTEN PERMISSION FROM GEIL ENGINEERING TITLE TO THESE PLANS AND/OR SPECIFICATIONS SHALL REMAIN WITH GEIL ENGINEERING WITHOUT PREJUDICE AND VISUAL CONTACT WITH THEM SHALL CONSTITUTE PRIMA FACIE EVIDENCE OF ACCEPTANCE OF THESE RESTRICTIONS.

BOUNDARY SHOWN IS BASED ON MONUMENTATION FOUND AND RECORD INFORMATION. THIS IS NOT A BOUNDARY SURVEY. THIS IS A SPECIALIZED TOPOGRAPHIC MAP WITH PROPERTY LINES AND EASEMENTS BEING A GRAPHIC DEPICTION BASED ON INFORMATION GATHERED FROM VARIOUS SOURCES OF RECORD AND AVAILABLE MONUMENTATION FOUND DURING THE FIELD SURVEY. NO EASEMENTS WERE RESEARCHED OR PLOTTED. PROPERTY LINES AND LINES OF TITLE WERE NOT INVESTIGATED NOR SURVEYED. NO PROPERTY MONUMENTS WERE SET.

Geil Engineering
Engineering * Surveying * Planning
1226 High Street
Auburn, California 95603-5015
Phone: (530) 885-0426 * Fax: (530) 823-1309

A.T.& T. Mobility

Project No./Name: CVL01280 / Kirkwood Plaza Shopping Center

Project Site Location: 1630 West Campbell Avenue
Campbell, CA 95008
Santa Clara County

Date of Observation: 06-18-20

Equipment/Procedure Used to Obtain Coordinates: Trimble Pathfinder Pro XL post processed with Pathfinder Office software.

Type of Antenna Mount: Rooftop

Coordinates (Tower)
Latitude: N 37° 17' xxx" (NAD83) N 37° 17' xxx" (NAD27)
Longitude: W 121° 58' xxx (NAD83) W 121° 58' xxx" (NAD27)

ELEVATION of Ground at Structure (NAVD88) xxx' AMSL
STRUCTURE HEIGHT: (Top Parapet Wall) xxx' AGL
OVERALL HEIGHT: (Top Skylite) xxx' AGL

CERTIFICATION: I, the undersigned, do hereby certify elevation listed above is based on a field survey done under my supervision and that the accuracy of those elevations meet or exceed 1-A Standards as defined in the FAA ASAC Information Sheet 91:003, and that they are true and accurate to the best of my knowledge and belief.

Kenneth D. Geil California RCE 14803

DATE OF SURVEY: 06-18-20

SURVEYED BY OR UNDER DIRECTION OF: KENNETH D. GEIL, R.C.E. 14803

LOCATED IN THE COUNTY OF SANTA CLARA, STATE OF CALIFORNIA

BEARINGS SHOWN ARE BASED UPON MONUMENTS FOUND AND RECORD INFORMATION. THIS IS NOT A BOUNDARY SURVEY.

ELEVATIONS SHOWN ON THIS PLAN ARE BASED UPON U.S.G.S. N.A.V.D. 88 DATUM. ABOVE MEAN SEA LEVEL.

N.G.V.D. 1929 CORRECTION: SUBTRACT xxx' FROM ELEVATIONS SHOWN.

CONTOUR INTERVAL: N/A

CONTRACTOR IS RESPONSIBLE TO VERIFY LEASE AREA PRIOR TO CONSTRUCTION.

ASSESSOR'S PARCEL NUMBER: 403-02-049

OWNER(S): KIRKORIAN FAMILY PARTNERSHIP
290 SARATOGA-LOS GATOS ROAD
LOS GATOS, CA 95030

| DEPT | APPROVED | DATE |
|---|---|---|
| A&C | | |
| RE | | |
| RF | | |
| INT | | |
| EE\IN | | |
| OPS | | |
| EE\OUT | | |

Surveyor
GEIL ENGINEERING
ENGINEERING * SURVEYING * PLANNING
1226 HIGH STREET
AUBURN, CALIFORNIA 95603
Phone: (530) 885-0426
Fax: (530) 823-1309

at&t MOBILITY

# CVL01280
# KIRKWOOD PLAZA SHOPPING CENTER
1630 W. CAMPBELL AVE.
CAMPBELL, CA 95008
PLOT PLAN AND
SITE TOPOGRAPHY

| REVISIONS | | |
|---|---|---|
| REV | 06-22-20 N. ROHDE | DRAWING SUBMITTAL |
| REV | 05-07-21 N. ROHDE | NAME CHANGE |
| REV | | |
| REV | | |
| REV | | |
| REV | | |

Sheet
C-1

BOUNDARY SHOWN IS BASED ON MONUMENTATION FOUND AND RECORD INFORMATION. THIS IS NOT A BOUNDARY SURVEY. THIS IS A SPECIALIZED TOPOGRAPHIC MAP WITH PROPERTY LINES AND EASEMENTS BEING A GRAPHIC DEPICTION BASED ON INFORMATION GATHERED FROM VARIOUS SOURCES OF RECORD AND AVAILABLE MONUMENTATION FOUND DURING THE FIELD SURVEY. NO EASEMENTS WERE RESEARCHED OR PLOTTED. PROPERTY LINES AND LINES OF TITLE WERE NOT INVESTIGATED NOR SURVEYED. NO PROPERTY MONUMENTS WERE SET.

THESE DRAWINGS AND/OR THE ACCOMPANYING SPECIFICATION AS INSTRUMENTS OF SERVICE, ARE THE EXCLUSIVE PROPERTY OF GEIL ENGINEERING AND THEIR USE AND PUBLICATION SHALL BE RESTRICTED TO THE ORIGINAL SITE AND CARRIER FOR WHICH THEY ARE PREPARED. REUSE, REPRODUCTION OR PUBLICATION BY ANY METHOD, IN WHOLE OR IN PART, IS PROHIBITED EXCEPT BY WRITTEN PERMISSION FROM GEIL ENGINEERING TITLE TO THESE PLANS AND/OR SPECIFICATIONS SHALL REMAIN WITH GEIL ENGINEERING WITHOUT PREJUDICE AND VISUAL CONTACT WITH THEM SHALL CONSTITUTE PRIMA FACIE EVIDENCE OF ACCEPTANCE OF THESE RESTRICTIONS.

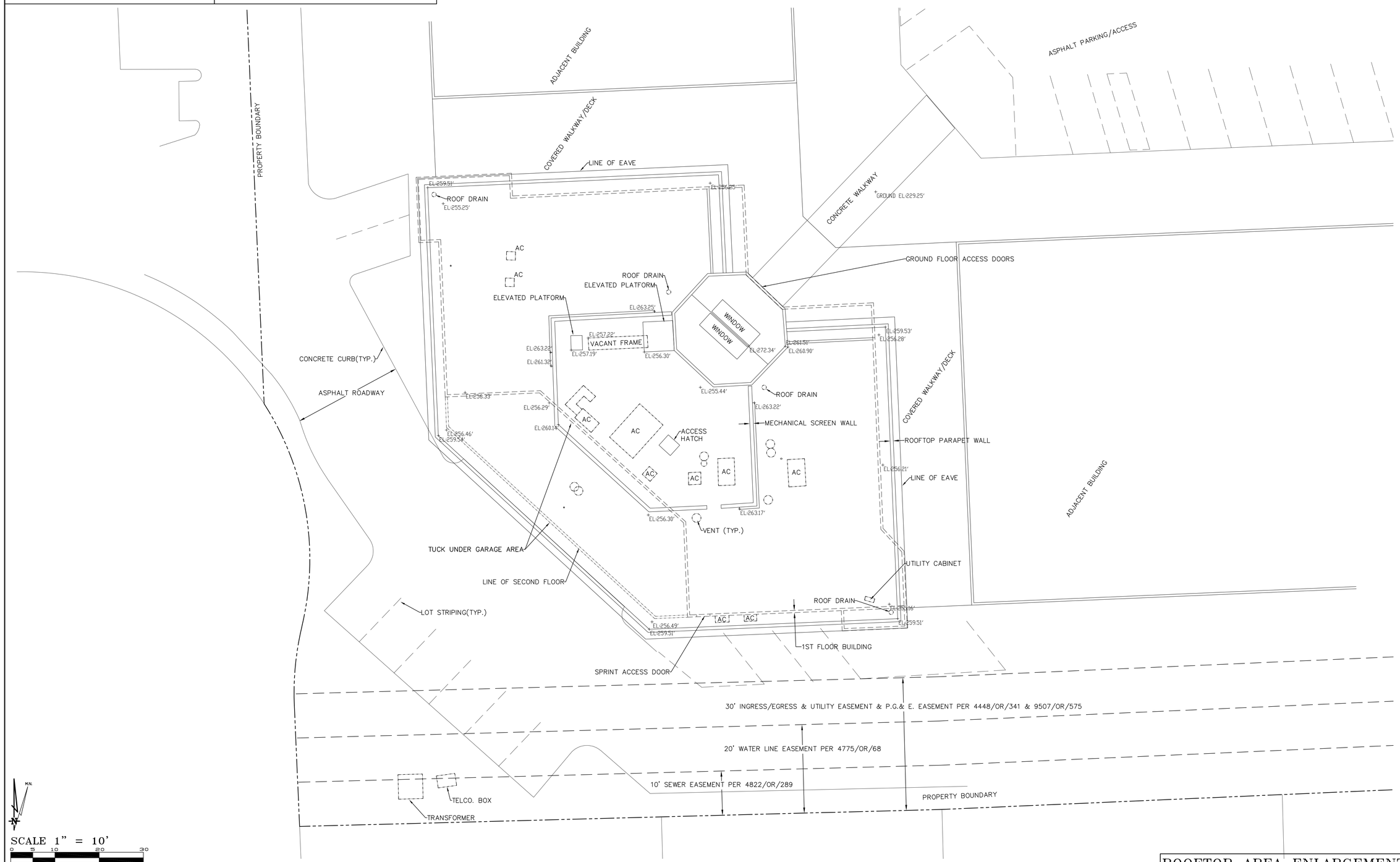


ROOFTOP AREA ENLARGEMENT

| DEPT | APPROVED | DATE |
|---|---|---|
| A&C | | |
| RE | | |
| RF | | |
| INT | | |
| EE\IN | | |
| OPS | | |
| EE\OUT | | |

Surveyor

GEIL ENGINEERING
ENGINEERING • SURVEYING • PLANNING
1228 HIGH STREET
AUBURN, CALIFORNIA 95603
Phone: (530) 885-0426
Fax: (530) 823-1309

at&t MOBILITY

CVL01280
KIRKWOOD PLAZA
SHOPPING CENTER
1630 W. CAMPBELL AVE.
CAMPBELL, CA 95008
PLOT PLAN AND
SITE TOPOGRAPHY

Sheet

C-2

NOTES:

1. THE WIRELESS COMMUNICATION FACILITY COMPLIES WITH FEDERAL STANDARDS FOR RADIO FREQUENCY IN ACCORDANCE WITH THE TELECOMMUNICATION ACT OF 1996 AND SUBSEQUENT AMENDMENTS AND ANY OTHER REQUIREMENTS IMPOSED BY STATE OR FEDERAL REGULATORY AGENCIES.
2. NO EXISTING PARKING STALLS ARE BEING ADDED OR REMOVED AS PART OF THE NEW INSTALLATION.
3. THE BELOW GRADING INFORMATION IS AN ESTIMATE:
   - TRENCH IS TO BE 3'-0" DEEP AND 16" WIDE - ALL SPOILS TO BE PLACED BACK INTO TRENCH & COMPACTED TO 90%
   - CONCRETE FOOTING IS TO BE 18 YARDS WITH A 5'-0" DIA.
   - CONCRETE PAD IS TO BE 9 YARDS TOTAL DISPLACEMENT - HALF ABOVE GRADE: DIRT TO BE IMPACTED 5 YARDS UNDER
   - ALL SPOILS TO BE REMOVED FROM PROJECT SITE

DISCLAIMER:
THIS SET OF DRAWINGS WAS PREPARED UTILIZING INFORMATION OBTAINED FROM PUBLIC DOCUMENTS MADE AVAILABLE ON THE JURISDICTIONS WEBSITE. M SQUARED WIRELESS CANNOT GUARANTEE THE ACCURACY OF THE DATA AND INFORMATION DEPICTED ON THE JURISDICTIONS WEBPAGE AND HEREBY EXPRESSLY DISCLAIMS ANY RESPONSIBILITY FOR THE TRUTH, VALIDITY, INVALIDITY, ACCURACY, INACCURACY OF ANY SAID DATA AND INFORMATION. THE PARCEL LINES ON MAPS ARE FOR ILLUSTRATION PURPOSES ONLY AND ARE NOT INTENDED TO BE USED AS A SURVEY PRODUCT. USER ACCEPTS RESPONSIBILITY FOR THE UNAUTHORIZED USE OR TRANSMISSION OF ANY SUCH DATA OR INFORMATION IN ITS ACTUAL OR ALTERED FORM.

## LEGEND

- PROPERTY LINE – SUBJECT PARCEL
- NEW LEASE AREA
- EXISTING SETBACK LINE
- X EXISTING FENCE LINE
- EXISTING ROAD
- EXISTING BUILDING

## COA REQUIREMENT FOR CONSTRUCTION ACTIVITIES:

THE APPLICANT SHALL ABIDE BY THE FOLLOWING REQUIREMENTS DURING CONSTRUCTION:

1. THE PROJECT SITE SHALL BE POSTED WITH THE NAME AND CONTACT NUMBER OF THE LEAD CONTRACTOR IN A LOCATION VISIBLE FROM THE PUBLIC STREET PRIOR TO THE ISSUANCE OF BUILDING PERMITS.
2. CONSTRUCTION ACTIVITIES SHALL BE LIMITED TO WEEKDAYS BETWEEN 8:00 A.M. AND 5:00 P.M. AND SATURDAYS BETWEEN 9:00 A.M. AND 4:00 P.M. NO CONSTRUCTION SHALL TAKE PLACE ON SUNDAYS OR HOLIDAYS UNLESS AN EXCEPTION IS GRANTED BY THE BUILDING OFFICIAL.
3. ALL CONSTRUCTION EQUIPMENT WITH INTERNAL COMBUSTION ENGINES USED ON THE PROJECT SITE SHALL BE PROPERLY MUFFLED AND MAINTAINED IN GOOD WORKING CONDITION.
4. UNNECESSARY IDLING OF INTERNAL COMBUSTION ENGINES SHALL BE STRICTLY PROHIBITED.
5. ALL STATIONARY NOISE-GENERATING CONSTRUCTION EQUIPMENT, SUCH AS AIR COMPRESSORS AND PORTABLE POWER GENERATORS, SHALL BE LOCATED AS FAR AS POSSIBLE FROM NOISE-SENSITIVE RECEPTORS SUCH AS EXISTING RESIDENCES AND BUSINESSES.
6. THE EXISTING LEDGESTONE MEDALLIONS AND BANDING SHALL BE REMOVED AND REPLACED HIGHER ON THE CUPOLA.
7. KIRKWOOD PLAZA SHOPPING K SIGN SHALL BE RELOCATED HIGHER ON THE CUPOLA OR REPLACED WITH A FUNCTIONAL ELEMENT SUCH AS A CLOCK.
8. LADDER AT THE REAR OF THE BUILDING SHALL BE REDESIGNED TO AVOID PRESENTING A CLIMBING HAZARD EITHER BY PROVIDING COMPLETE CAGE AROUND THE LADDER TO PROHIBIT UNAUTHORIZED ACCESS OR BY EXTENDING THE BUILDING IN THIS AREA TO BE FLUSH WITH THE LADDER TO PREVENT ACCESS FROM THE REAR.

CALL CALIFORNIA ONE CALL
(800) 227-2600
CALL 3 WORKING DAYS
BEFORE YOU DIG!

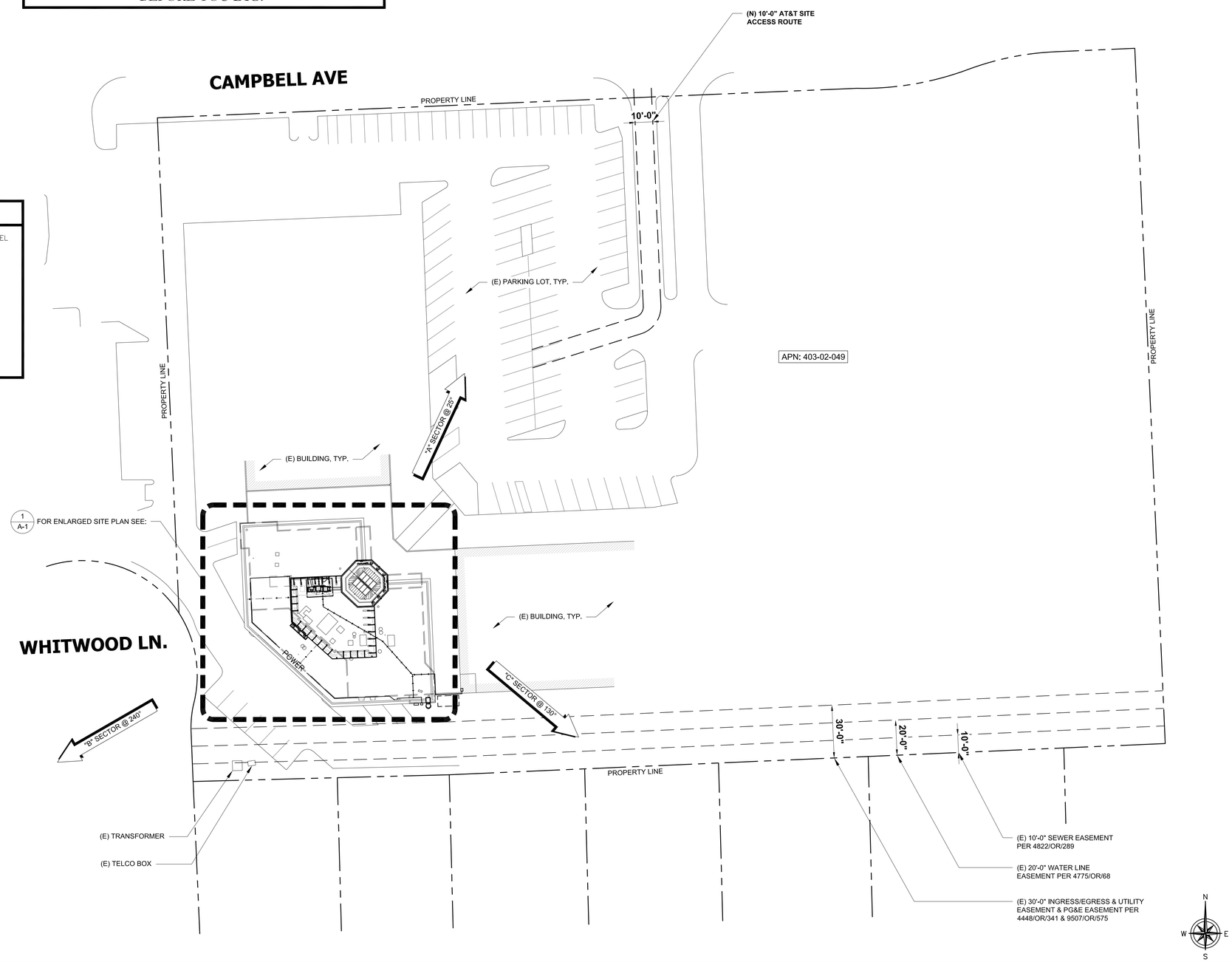


# SITE PLAN

24"x36" SCALE: 1" = 30'-0"
11"x17" SCALE: 1" = 60'-0"
30' 15' 0' 30'

1

ISSUED FOR:
KIRKWOOD PLAZA SHOPPING CENTER
1630 W CAMPBELL AVE., CAMPBELL, CA 95008

at&t
5001 EXECUTIVE PARKWAY
SAN RAMON, CALIFORNIA 94583

EPIC WIRELESS GROUP LLC
Connecting a Wireless World

M SQUARED WIRELESS
1387 CALLE AVANZADO
SAN CLEMENTE CA 92673 (949) 391-6824

| | |
|---|---|
| AT&T SITE NO: | CCL01280 |
| PROJECT NO: | 13334607 |
| DRAWN BY: | SD |
| CHECKED BY: | MF |

| REV | DATE | DESCRIPTION | BY |
|---|---|---|---|
| | | | |
| | | | |
| | | | |
| 2 | 12/22/2022 | 100% CD'S REVISED | SP |
| 1 | 12/19/2022 | 100% CD'S FOR SUBMITTAL | BM |
| 0 | 11/30/2022 | 100% CD'S FOR REVIEW | BM |
| C | 02/01/2022 | 95% CD'S REVISED – RLS | BM |
| B | 12/20/2021 | 90% CD'S FOR REV-RLS | DR |
| A | 11/29/2021 | 90% CD'S FOR REVIEW | BM |

LICENSOR:

REGISTERED PROFESSIONAL ENGINEER
WELLS HOLMES
S 8203
STRUCTURAL
STATE OF CALIFORNIA
12/22/2022

IT IS A VIOLATION OF LAW FOR ANY PERSON, UNLESS THEY ARE ACTING UNDER THE DIRECTION OF A LICENSED PROFESSIONAL ENGINEER, TO ALTER THIS DOCUMENT.

SHEET TITLE
SITE PLAN

SHEET NUMBER
A-0

NOTES:

1. THE WIRELESS COMMUNICATION FACILITY COMPLIES WITH FEDERAL STANDARDS FOR RADIO FREQUENCY IN ACCORDANCE WITH THE TELECOMMUNICATION ACT OF 1996 AND SUBSEQUENT AMENDMENTS AND ANY OTHER REQUIREMENTS IMPOSED BY STATE OR FEDERAL REGULATORY AGENCIES.
2. NO EXISTING PARKING STALLS ARE BEING ADDED OR REMOVED AS PART OF THE NEW INSTALLATION.
3. THE BELOW GRADING INFORMATION IS AN ESTIMATE:
   - TRENCH IS TO BE 3'-0" DEEP AND 16" WIDE - ALL SPOILS TO BE PLACED BACK INTO TRENCH & COMPACTED TO 90%
   - CONCRETE FOOTING IS TO BE 18 YARDS WITH A 5'-0" DIA.
   - CONCRETE PAD IS TO BE 9 YARDS TOTAL DISPLACEMENT - HALF ABOVE GRADE: DIRT TO BE IMPACTED 5 YARDS UNDER
   - ALL SPOILS TO BE REMOVED FROM PROJECT SITE

DISCLAIMER:
THIS SET OF DRAWINGS WAS PREPARED UTILIZING INFORMATION OBTAINED FROM PUBLIC DOCUMENTS MADE AVAILABLE ON THE JURISDICTIONS WEBSITE. M SQUARED WIRELESS CANNOT GUARANTEE THE ACCURACY OF THE DATA AND INFORMATION DEPICTED ON THE JURISDICTIONS WEBPAGE AND HEREBY EXPRESSLY DISCLAIMS ANY RESPONSIBILITY FOR THE TRUTH, VALIDITY, INVALIDITY, ACCURACY, INACCURACY OF ANY SAID DATA AND INFORMATION. THE PARCEL LINES ON MAPS ARE FOR ILLUSTRATION PURPOSES ONLY AND ARE NOT INTENDED TO BE USED AS A SURVEY PRODUCT. USER ACCEPTS RESPONSIBILITY FOR THE UNAUTHORIZED USE OR TRANSMISSION OF ANY SUCH DATA OR INFORMATION IN ITS ACTUAL OR ALTERED FORM.

CALL CALIFORNIA ONE CALL
(800) 227-2600
CALL 3 WORKING DAYS
BEFORE YOU DIG!

## LEGEND

- PROPERTY LINE – SUBJECT PARCEL
- NEW LEASE AREA
- EXISTING SETBACK LINE
- X EXISTING FENCE LINE
- EXISTING ROAD
- EXISTING BUILDING

CUPOLA NOTES:
THE PROPOSED HEIGHT OF THE AT&T FACILITY IS AS TALL AS IT COULD EVER BE (MAX HEIGHT) THE BUILDING AND ITS ROOFTOP DOES NOT HAVE STRUCTURAL CAPACITY FOR ANOTHER WIRELESS PROVIDER AND ANY AND ALL EXTENSIONS WOULD DEFEAT CONCEALMENT METHOD EXPRESSED IN THE CITY'S CODE.

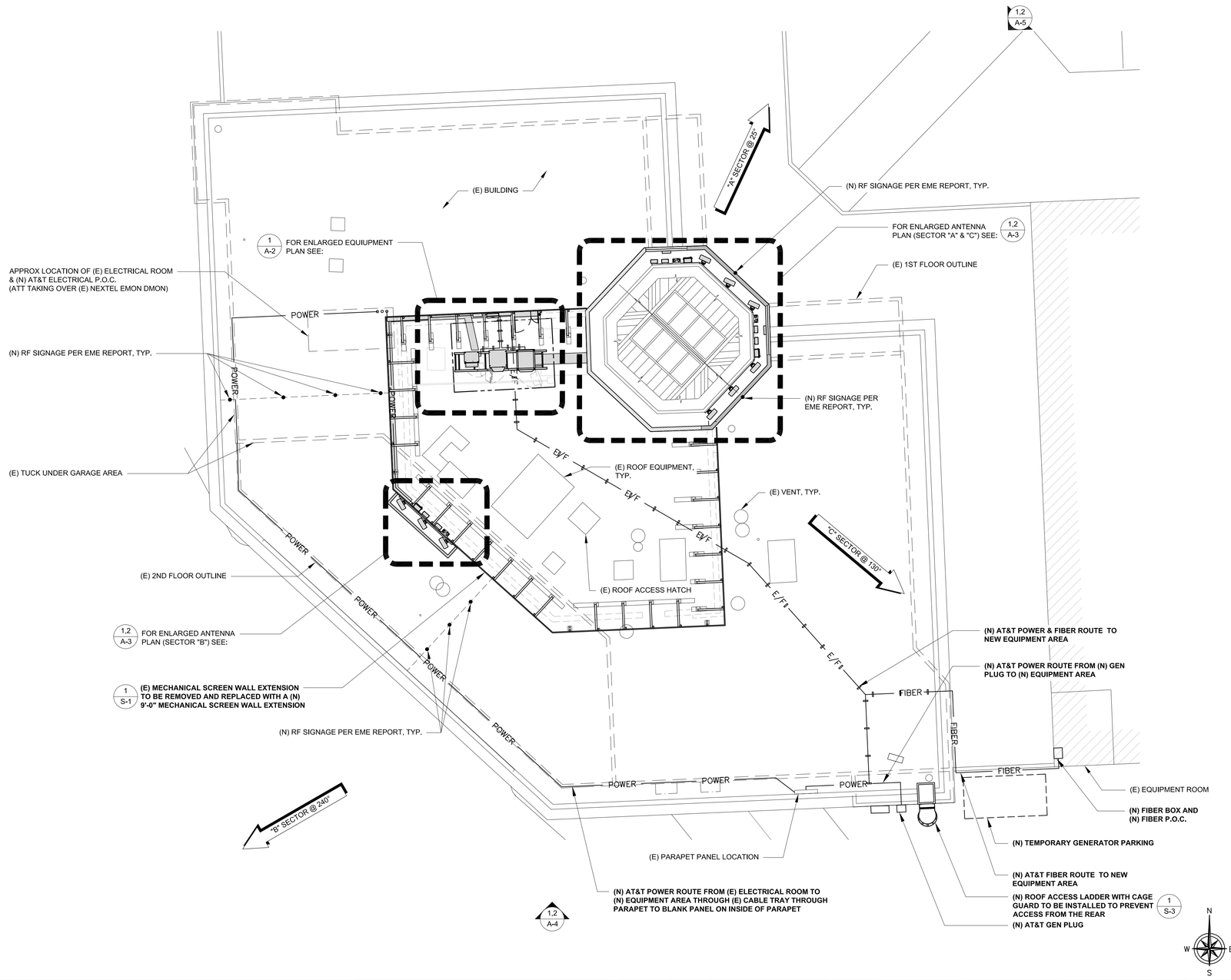


# ENLARGED SITE PLAN

24"x36" SCALE: 1/8" = 1'-0"
11"x17" SCALE: 1/16" = 1'-0"
8' 6' 4' 2' 0" 8'

1

ISSUED FOR:
KIRKWOOD PLAZA SHOPPING CENTER
1630 W CAMPBELL AVE., CAMPBELL, CA 95008

at&t
5001 EXECUTIVE PARKWAY
SAN RAMON, CALIFORNIA 94583

EPIC WIRELESS GROUP LLC
Connecting a Wireless World

M SQUARED WIRELESS
1387 CALLE AVANZADO
SAN CLEMENTE CA 92673 (949) 391-6824

| | |
|---|---|
| AT&T SITE NO: | CCL01280 |
| PROJECT NO: | 13334607 |
| DRAWN BY: | SD |
| CHECKED BY: | MF |

| REV | DATE | DESCRIPTION | BY |
|---|---|---|---|
| | | | |
| | | | |
| | | | |
| 2 | 12/22/2022 | 100% CD'S REVISED | SP |
| 1 | 12/19/2022 | 100% CD'S FOR SUBMITTAL | BM |
| 0 | 11/30/2022 | 100% CD'S FOR REVIEW | BM |
| C | 02/01/2022 | 95% CD'S REVISED – RLS | BM |
| B | 12/20/2021 | 90% CD'S FOR REV–RLS | DR |
| A | 11/29/2021 | 90% CD'S FOR REVIEW | BM |

LICENSOR:

REGISTERED PROFESSIONAL ENGINEER
WELLS HOLMES
S 8203
STRUCTURAL
STATE OF CALIFORNIA
12/22/2022

IT IS A VIOLATION OF LAW FOR ANY PERSON, UNLESS THEY ARE ACTING UNDER THE DIRECTION OF A LICENSED PROFESSIONAL ENGINEER, TO ALTER THIS DOCUMENT.

SHEET TITLE
ENLARGED SITE PLAN

SHEET NUMBER
A-1

| NEW AT&T EQUIPMENT INFOMATION | | |
|---|---|---|
| EQUIPMENT | WEIGHT (EMPTY) | WEIGHT (FULL) |
| PURCELL CABINET | 105LBS | 525LBS |
| NETSURE FLEX CABINET | 778LBS | 2206LBS |
| NETSURE 512 BATTERY CABINET | 690LBS | 2300LBS |
| SPD BOX | - | 135LBS |
| CIENA BOX | - | 24LBS |

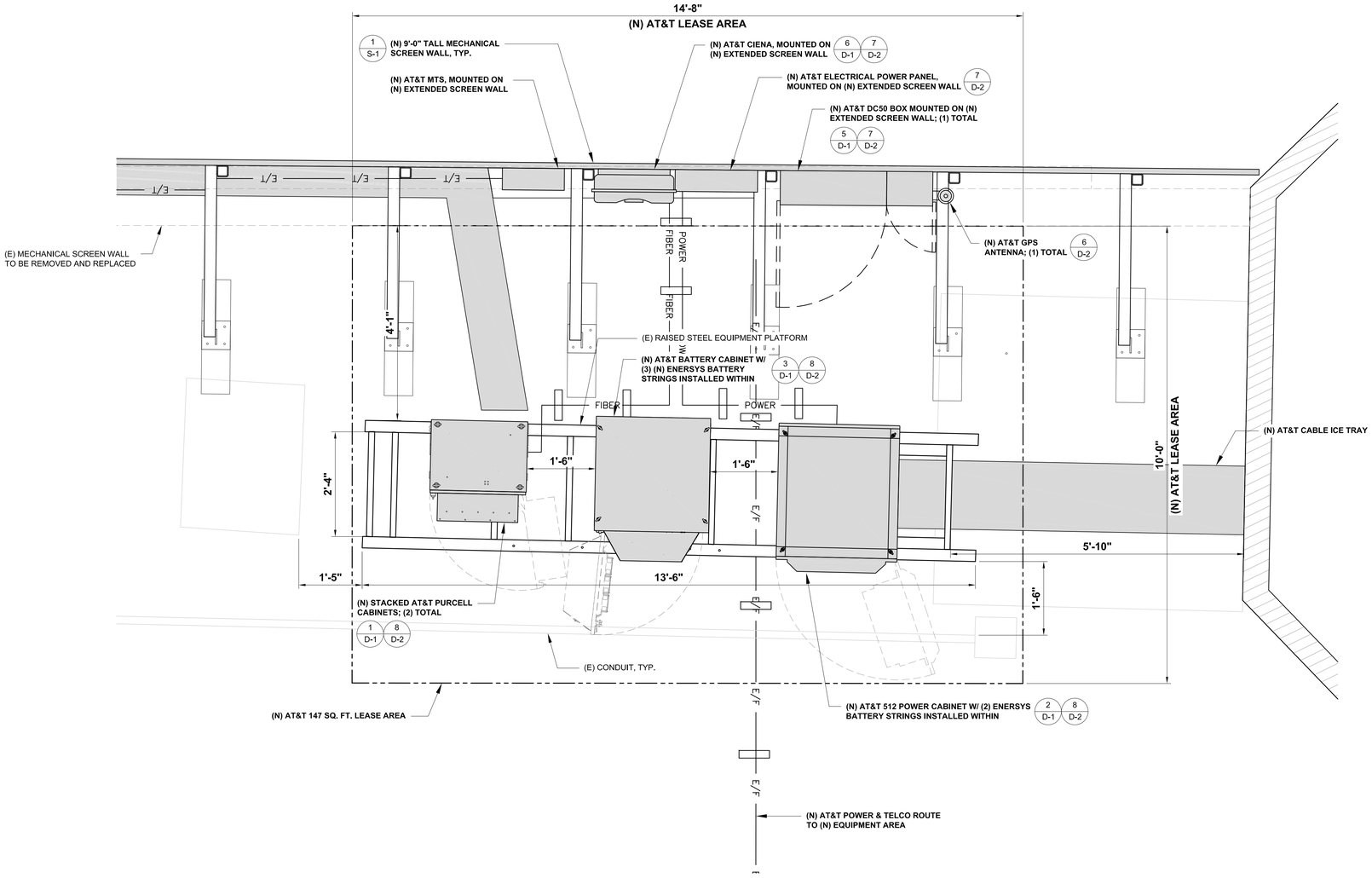


## EQUIPMENT LAYOUT PLAN

24"x36" SCALE: 3/4" = 1'-0"
11"x17" SCALE: 3/8" = 1'-0"

1' 6" 0" 1'

1

ISSUED FOR:
KIRKWOOD PLAZA SHOPPING CENTER
1630 W CAMPBELL AVE., CAMPBELL, CA 95008

at&t
5001 EXECUTIVE PARKWAY
SAN RAMON, CALIFORNIA 94583

EPIC WIRELESS GROUP LLC
Connecting a Wireless World

M SQUARED WIRELESS
1387 CALLE AVANZADO
SAN CLEMENTE CA 92673 (949) 391-6824

| | |
|---|---|
| AT&T SITE NO: | CCL01280 |
| PROJECT NO: | 13334607 |
| DRAWN BY: | SD |
| CHECKED BY: | MF |

| REV | DATE | DESCRIPTION | BY |
|---|---|---|---|
| 2 | 12/22/2022 | 100% CD'S REVISED | SP |
| 1 | 12/19/2022 | 100% CD'S FOR SUBMITTAL | BM |
| 0 | 11/30/2022 | 100% CD'S FOR REVIEW | BM |
| C | 02/01/2022 | 95% CD'S REVISED – RLS | BM |
| B | 12/20/2021 | 90% CD'S FOR REV–RLS | DR |
| A | 11/29/2021 | 90% CD'S FOR REVIEW | BM |

LICENSOR:

REGISTERED PROFESSIONAL ENGINEER WELLS HOLMES S 6203 STRUCTURAL STATE OF CALIFORNIA

12/22/2022

IT IS A VIOLATION OF LAW FOR ANY PERSON, UNLESS THEY ARE ACTING UNDER THE DIRECTION OF A LICENSED PROFESSIONAL ENGINEER, TO ALTER THIS DOCUMENT.

SHEET TITLE
EQUIPMENT LAYOUT PLAN

SHEET NUMBER
A-2

| | | NEW OPTIMAL ANTENNA AND TRANSMISSION CABLES REQUIREMENT (VERIFY WITH CURRENT RFDS) | | | | | | NEW REMOTE RADIO UNITS, TOWER MOUNTED AMPLIFIERS AND ANTENNA FILTERS (VERIFY WITH CURRENT RFDS) | | | | |
|---|---|---|---|---|---|---|---|---|---|---|---|---|
| | ANTENNA | NEW TECHNOLOGY | ANTENNA MODEL | ANTENNA AZIMUTH | RAD CENTER | TRANSMISSION LINE | | RRUS MODEL | RRUS COUNT | TMA, ANTENNA FILTER, & SURGE SUPRESSOR | TMA/ FILTER/ SURGE COUNT | #DC FEEDS |
| | | | | | | LENGTH | TYPE | | | | | |
| ALPHA SECTOR | A1 | LTE 700/850 /1900/5G | COMMSCOPE NNH4-65B-R6H4 (6'-0") | 25° | 37'-11" | ±60' | FIBER | **RRUS B5/B12 4449 & B2/B66A 8843** | 2 | **DC-9 SURGE SUPPRESSOR BOX** | 1 | 3 |
| | A2 | LTE/ LTE 700 | COMMSCOPE NNH4-65B-R6H4 (6'-0") | 25° | 37'-11" | ±60' | FIBER | **RRUS 4478 B14 & RRU 4426 B66 (FUTURE)** | 2 | - | - | - |
| | A3 | LTE/ LTE 700/ LTE WCS | COMMSCOPE NNH4-65B-R6H4 (6'-0") | 25° | 37'-11" | ±60' | FIBER | **RRUS 4415 B30 & 2012 B29** | 2 | - | - | - |
| BETA SECTOR | B1 | LTE 700/850 /1900/5G | COMMSCOPE NNH4-65B-R6H4 (6'-0") | 240° | 33'-4" | ±60' | FIBER | **RRUS B5/B12 4449 & B2/B66A 8843** | 2 | **DC-9 SURGE SUPPRESSOR BOX** | 1 | 3 |
| | B2 | LTE/ LTE 700 | COMMSCOPE NNH4-65B-R6H4 (6'-0") | 240° | 33'-4" | ±60' | FIBER | **RRUS 4478 B14 & RRU 4426 B66 (FUTURE)** | 2 | - | - | - |
| | B3 | LTE/ LTE 700/ LTE WCS | COMMSCOPE NNH4-65B-R6H4 (6'-0") | 240° | 33'-4" | ±60' | FIBER | **RRUS 4415 B30 & 2012 B29** | 2 | - | - | - |
| GAMMA SECTOR | C1 | LTE 700/850 /1900/5G | COMMSCOPE NNH4-65B-R6H4 (6'-0") | 130° | 37'-11" | ±60' | FIBER | **RRUS B5/B12 4449 & B2/B66A 8843** | 2 | **DC-9 SURGE SUPPRESSOR BOX** | 1 | 3 |
| | C2 | LTE/ LTE 700 | COMMSCOPE NNH4-65B-R6H4 (6'-0") | 130° | 37'-11" | ±60' | FIBER | **RRUS 4478 B14 & RRU 4426 B66 (FUTURE)** | 2 | - | - | - |
| | C3 | LTE/ LTE 700/ LTE WCS | COMMSCOPE NNH4-65B-R6H4 (6'-0") | 130° | 37'-11" | ±60' | FIBER | **RRUS 4415 B30 & 2012 B29** | 2 | - | - | - |
| | | | | | | | | | **18** TOTAL | | **3** TOTAL | **9** TOTAL |

NOTES TO CONTRACTOR:
1. CONTRACTOR IS TO REFER TO AT&T'S MOST CURRENT RADIO FREQUENCY DATA SHEET (RFDS) PRIOR TO CONSTRUCTION
2. CABLE LENGTHS WERE DETERMINED BASED ON VISUAL INSPECTION DURING SITE-WALK. CONTRACTOR TO VERIFY ACTUAL LENGTH DURING PRE-CONSTRUCTION WALK
3. CONTRACTOR TO VERIFY PORTS HAVE SUFFICIENT ROOM
4. FINAL STRUCTURAL DESIGN, ANALYSIS, AND APPROVAL PENDING. CONTRACTOR TO VERIFY EQUIPMENT INSTALLED IS PER FINAL STRUCTURAL ANALYSIS:
   BY: VECTOR STRUCTURAL ENGINEERING
   DATED: NOVEMBER 29, 2022
5. CONTRACTOR TO VERIFY ADEQUATE SPACING PER MANUFACTURER'S REQUIREMENTS AND ON SITE CONDITIONS.
6. FINAL CUPOLA STRUCTURAL DESIGN AND ANALYSIS PROVIDED BY OTHERS. CONTRACTOR TO VERIFY DESIGN IS INSTALLED PER FINAL DRAWINGS.
   BY: LARSON
   DATED: JUNE 22, 2022
7. SKYLIGHT DESIGN AND PLANS ARE PREPARED BY OTHERS. PLEASE REFER TO LARSON SHEET S1.0 FOR CUPOLA DESIGN.

## ANTENNA & TOWER MOUNTED EQUIPMENT SCHEDULE

2

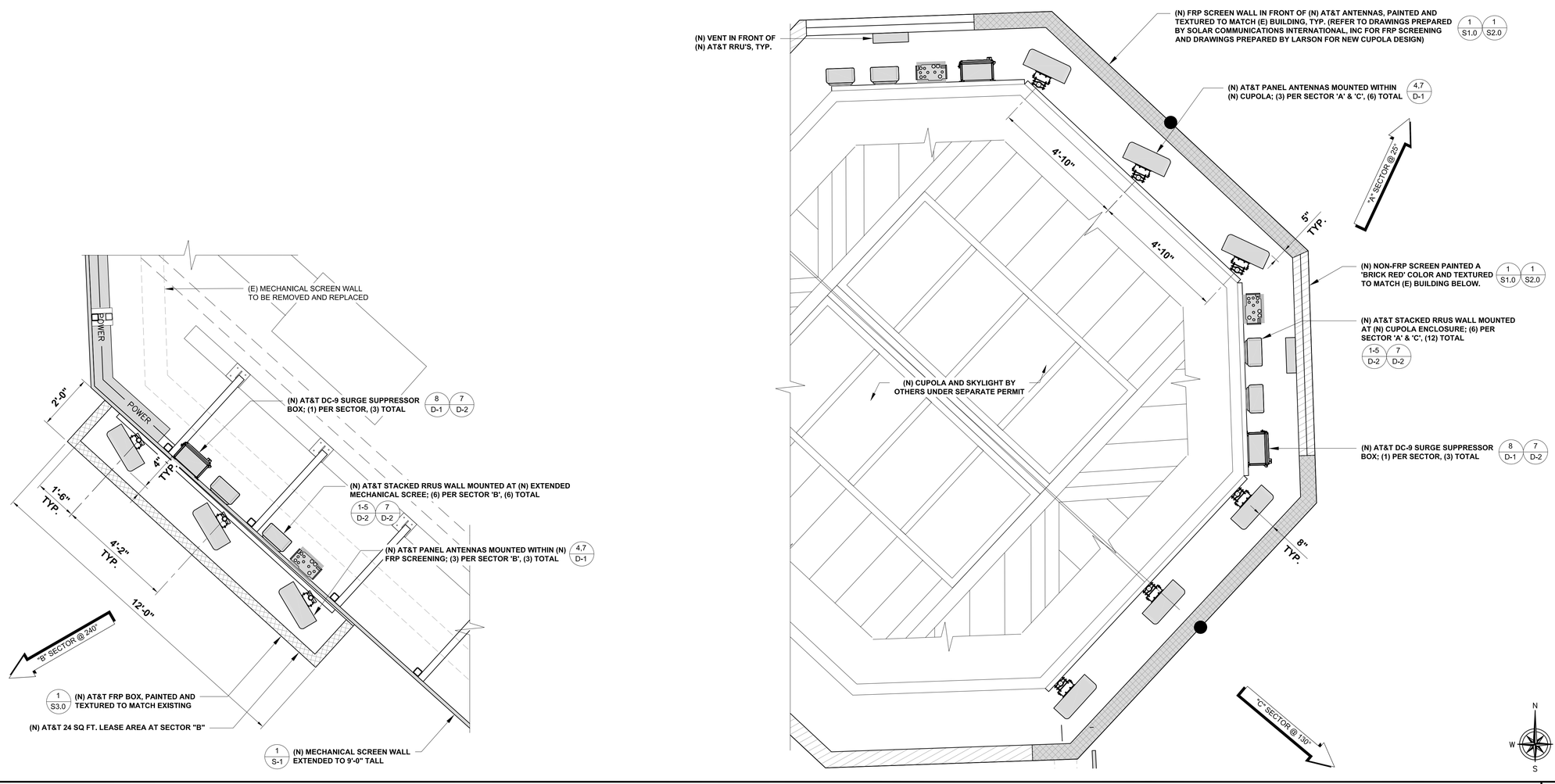


## NEW ANTENNA PLAN

24"x36" SCALE: 1/2" = 1'-0"
11"x17" SCALE: 1/4" = 1'-0"
0" 1' 2' 4'

1

ISSUED FOR:
KIRKWOOD PLAZA SHOPPING CENTER
1630 W CAMPBELL AVE., CAMPBELL, CA 95008

at&t
5001 EXECUTIVE PARKWAY
SAN RAMON, CALIFORNIA 94583

EPIC WIRELESS GROUP LLC
Connecting a Wireless World

M SQUARED WIRELESS
1387 CALLE AVANZADO
SAN CLEMENTE CA 92673 (949) 391-6824

| | |
|---|---|
| AT&T SITE NO: | CCL01280 |
| PROJECT NO: | 13334607 |
| DRAWN BY: | SD |
| CHECKED BY: | MF |

| REV | DATE | DESCRIPTION | BY |
|---|---|---|---|
| | | | |
| | | | |
| | | | |
| 2 | 12/22/2022 | 100% CD'S REVISED | SP |
| 1 | 12/19/2022 | 100% CD'S FOR SUBMITTAL | BM |
| 0 | 11/30/2022 | 100% CD'S FOR REVIEW | BM |
| C | 02/01/2022 | 95% CD'S REVISED – RLS | BM |
| B | 12/20/2021 | 90% CD'S FOR REV-RLS | DR |
| A | 11/29/2021 | 90% CD'S FOR REVIEW | BM |

LICENSOR:
REGISTERED PROFESSIONAL ENGINEER WELLS HOLMES S-6203 STRUCTURAL STATE OF CALIFORNIA
12/22/2022

IT IS A VIOLATION OF LAW FOR ANY PERSON, UNLESS THEY ARE ACTING UNDER THE DIRECTION OF A LICENSED PROFESSIONAL ENGINEER, TO ALTER THIS DOCUMENT.

SHEET TITLE
ANTENNA PLAN AND SCHEDULE

SHEET NUMBER
A-3

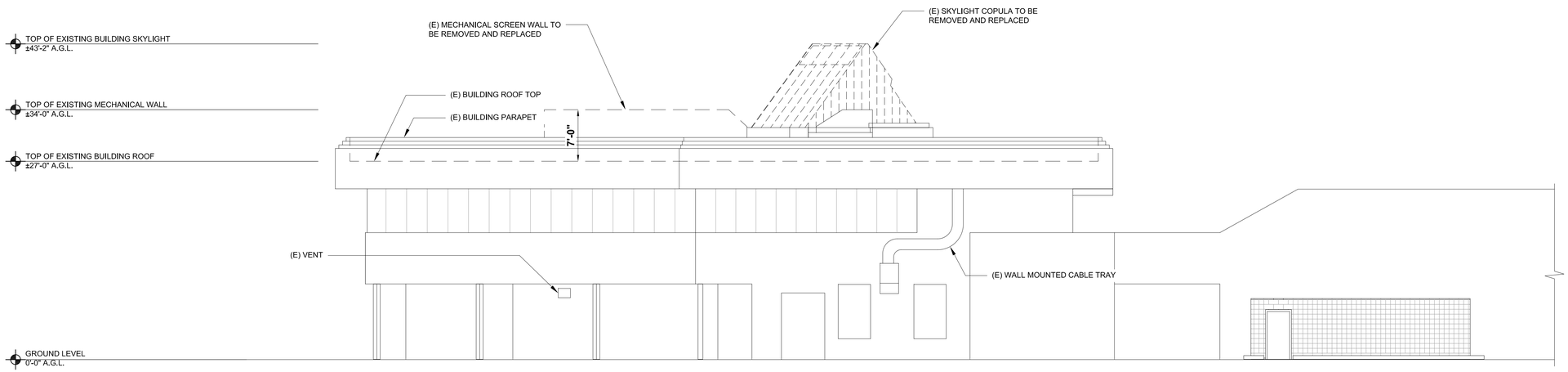


## EXISTING SOUTH ELEVATION

24"x36" SCALE: 1/8" = 1'-0"
11"x17" SCALE: 1/16" = 1'-0"
8' 6' 4' 2' 0' 8'

1

CUPOLA NOTES:
1. THE PROPOSED HEIGHT OF THE AT&T FACILITY IS AS TALL AS IT COULD EVER BE (MAX HEIGHT) THE BUILDING AND ITS ROOFTOP DOES NOT HAVE STRUCTURAL CAPACITY FOR ANOTHER WIRELESS PROVIDER AND ANY AND ALL EXTENSIONS WOULD DEFEAT CONCEALMENT METHOD EXPRESSED IN THE CITY'S CODE.

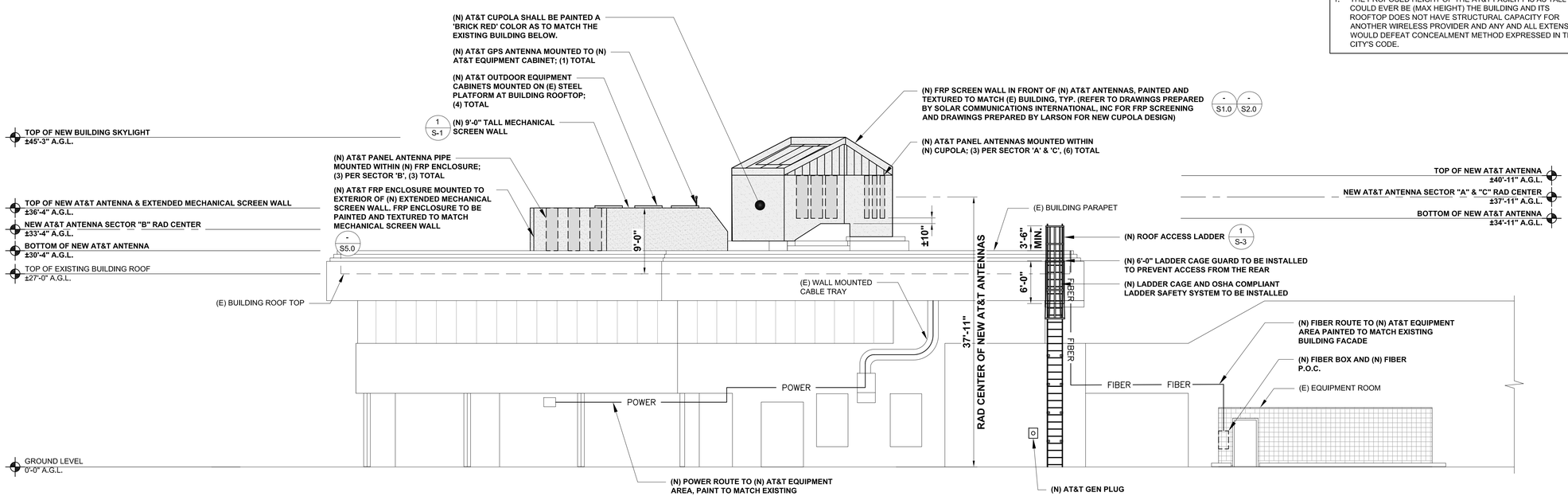


## NEW SOUTH ELEVATION

24"x36" SCALE: 1/8" = 1'-0"
11"x17" SCALE: 1/16" = 1'-0"
8' 6' 4' 2' 0' 8'

2

ISSUED FOR:
KIRKWOOD PLAZA SHOPPING CENTER
1630 W CAMPBELL AVE., CAMPBELL, CA 95008


at&t
5001 EXECUTIVE PARKWAY
SAN RAMON, CALIFORNIA 94583

EPIC WIRELESS GROUP LLC
Connecting a Wireless World

M SQUARED WIRELESS
1387 CALLE AVANZADO
SAN CLEMENTE CA 92673 (949) 391-6824


| | |
|---|---|
| AT&T SITE NO: | CCL01280 |
| PROJECT NO: | 13334607 |
| DRAWN BY: | SD |
| CHECKED BY: | MF |

| REV | DATE | DESCRIPTION | BY |
|---|---|---|---|
| | | | |
| | | | |
| | | | |
| 2 | 12/22/2022 | 100% CD'S REVISED | SP |
| 1 | 12/19/2022 | 100% CD'S FOR SUBMITTAL | BM |
| 0 | 11/30/2022 | 100% CD'S FOR REVIEW | BM |
| C | 02/01/2022 | 95% CD'S REVISED – RLS | BM |
| B | 12/20/2021 | 90% CD'S FOR REV–RLS | DR |
| A | 11/29/2021 | 90% CD'S FOR REVIEW | BM |

LICENSOR:

REGISTERED PROFESSIONAL ENGINEER
WELLS HOLMES
S 8203
STRUCTURAL
STATE OF CALIFORNIA
12/22/2022


IT IS A VIOLATION OF LAW FOR ANY PERSON, UNLESS THEY ARE ACTING UNDER THE DIRECTION OF A LICENSED PROFESSIONAL ENGINEER, TO ALTER THIS DOCUMENT.


SHEET TITLE
ELEVATIONS

SHEET NUMBER
A-4

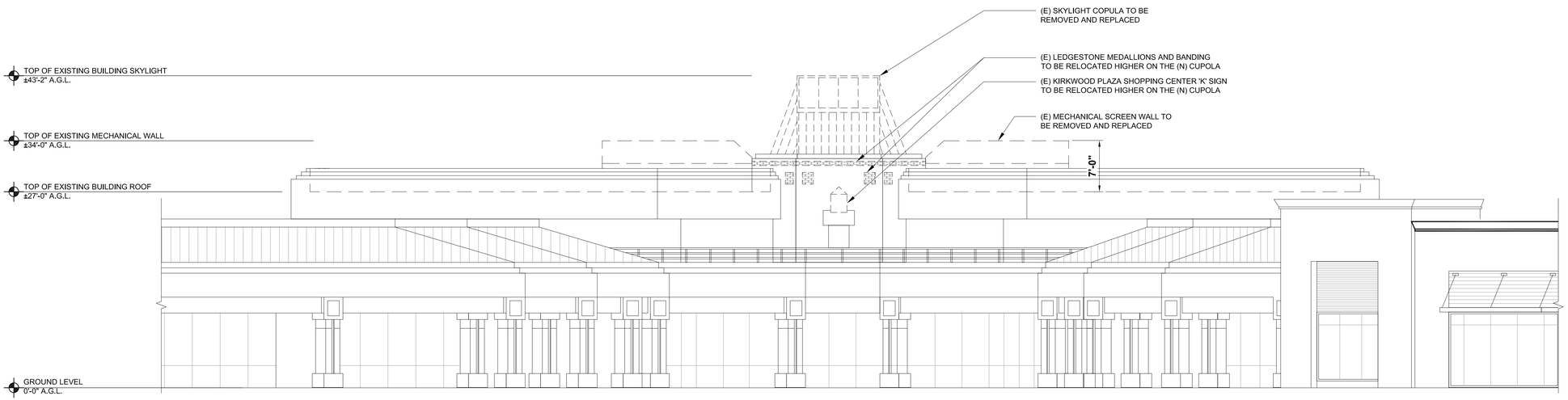


## EXISTING NORTHEAST ELEVATION

24"x36" SCALE: 1/8" = 1'-0"
11"x17" SCALE: 1/16" = 1'-0"
8' 6' 4' 2' 0' 8'

1

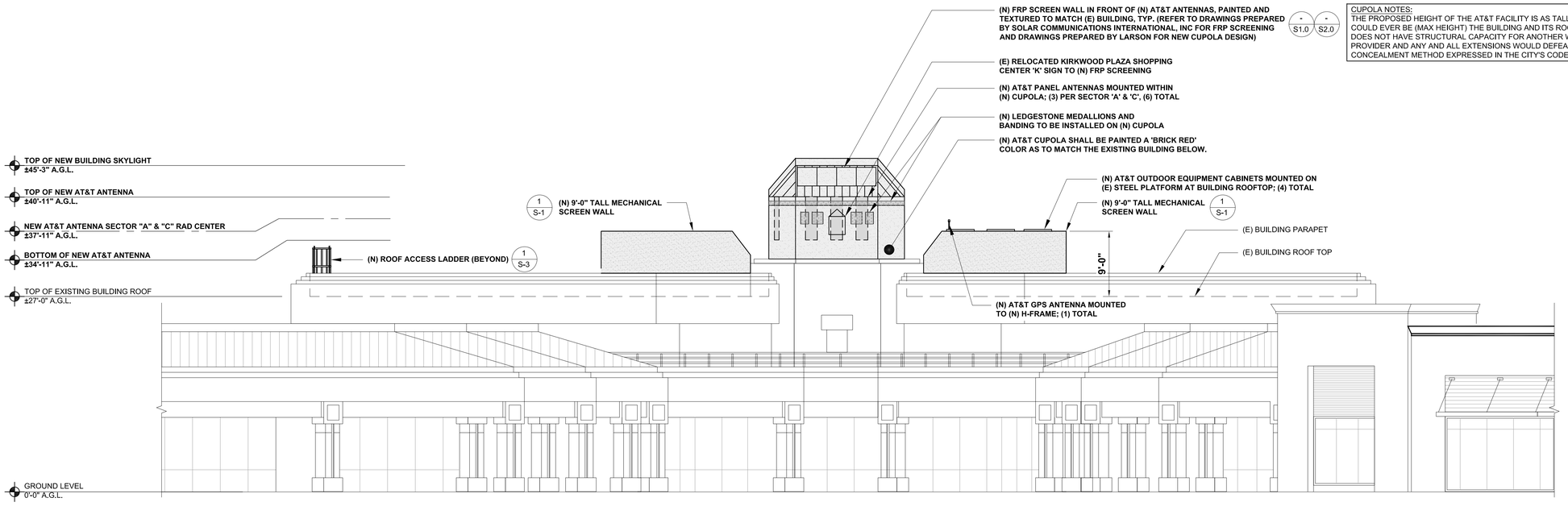


CUPOLA NOTES:
THE PROPOSED HEIGHT OF THE AT&T FACILITY IS AS TALL AS IT COULD EVER BE (MAX HEIGHT) THE BUILDING AND ITS ROOFTOP DOES NOT HAVE STRUCTURAL CAPACITY FOR ANOTHER WIRELESS PROVIDER AND ANY AND ALL EXTENSIONS WOULD DEFEAT CONCEALMENT METHOD EXPRESSED IN THE CITY'S CODE.

## NEW NORTHEAST ELEVATION

24"x36" SCALE: 1/8" = 1'-0"
11"x17" SCALE: 1/16" = 1'-0"
8' 6' 4' 2' 0' 8'

2

ISSUED FOR:
KIRKWOOD PLAZA SHOPPING CENTER
1630 W CAMPBELL AVE., CAMPBELL, CA 95008


at&t
5001 EXECUTIVE PARKWAY
SAN RAMON, CALIFORNIA 94583

EPIC WIRELESS GROUP LLC
Connecting a Wireless World

M SQUARED WIRELESS
1387 CALLE AVANZADO
SAN CLEMENTE CA 92673 (949) 391-6824


| | |
|---|---|
| AT&T SITE NO: | CCL01280 |
| PROJECT NO: | 13334607 |
| DRAWN BY: | SD |
| CHECKED BY: | MF |

| REV | DATE | DESCRIPTION | BY |
|---|---|---|---|
| 2 | 12/22/2022 | 100% CD'S REVISED | SP |
| 1 | 12/19/2022 | 100% CD'S FOR SUBMITTAL | BM |
| 0 | 11/30/2022 | 100% CD'S FOR REVIEW | BM |
| C | 02/01/2022 | 95% CD'S REVISED – RLS | BM |
| B | 12/20/2021 | 90% CD'S FOR REV–RLS | DR |
| A | 11/29/2021 | 90% CD'S FOR REVIEW | BM |

LICENSOR:

REGISTERED PROFESSIONAL ENGINEER
WELLS HOLMES
S 6203
STRUCTURAL
STATE OF CALIFORNIA

12/22/2022


IT IS A VIOLATION OF LAW FOR ANY PERSON, UNLESS THEY ARE ACTING UNDER THE DIRECTION OF A LICENSED PROFESSIONAL ENGINEER, TO ALTER THIS DOCUMENT.


SHEET TITLE
ELEVATIONS

SHEET NUMBER
A-5

NOTES:
1. PAINT COLOR: THE CUPOLA SHALL BE PAINTED A 'BRICK RED' COLOR AS TO MATCH THE EXISTING BUILDING BELOW.
2. METAL ROOF: THE STANDING SEAM METAL ROOF SHALL BE REDESIGNED TO INCLUDE A HIPPED ROOF ELEMENT LIKE THAT OF ADJACENT BUILDINGS ONSITE.
3. MEDALLIONS & BANDING: THE EXISTING LEDGESTONE MEDALLIONS AND BANDING SHALL BE REMOVED AND REPLACED HIGHER ON THE CUPOLA.
4. KIRKWOOD SIGN: THE KIRKWOOD PLAZA SHOPPING CENTER 'K' SIGN SHALL BE RELOCATED HIGHER ON THE CUPOLA OR REPLACED WITH A FUNCTION ELEMENT SUCH AS A CLOCK.

ISSUED FOR:
KIRKWOOD PLAZA SHOPPING CENTER
1630 W CAMPBELL AVE., CAMPBELL, CA 95008

at&t
5001 EXECUTIVE PARKWAY
SAN RAMON, CALIFORNIA 94583

EPIC WIRELESS GROUP LLC
Connecting a Wireless World

M SQUARED WIRELESS
1387 CALLE AVANZADO
SAN CLEMENTE CA 92673 (949) 391-6824

| | |
|---|---|
| AT&T SITE NO: | CCL01280 |
| PROJECT NO: | 13334607 |
| DRAWN BY: | SD |
| CHECKED BY: | MF |

| REV | DATE | DESCRIPTION | BY |
|---|---|---|---|
| 2 | 12/22/2022 | 100% CD'S REVISED | SP |
| 1 | 12/19/2022 | 100% CD'S FOR SUBMITTAL | BM |
| 0 | 11/30/2022 | 100% CD'S FOR REVIEW | BM |
| C | 02/01/2022 | 95% CD'S REVISED – RLS | BM |
| B | 12/20/2021 | 90% CD'S FOR REV–RLS | DR |
| A | 11/29/2021 | 90% CD'S FOR REVIEW | BM |

LICENSOR:

REGISTERED PROFESSIONAL ENGINEER
WELLS HOLMES
S 6203
STRUCTURAL
STATE OF CALIFORNIA

12/22/2022

IT IS A VIOLATION OF LAW FOR ANY PERSON, UNLESS THEY ARE ACTING UNDER THE DIRECTION OF A LICENSED PROFESSIONAL ENGINEER, TO ALTER THIS DOCUMENT.

SHEET TITLE
SITE PHOTOGRAPHY

SHEET NUMBER
A-6

| MANUFACTURER: | RAYCAP |
|---|---|
| MODEL NO.: | DC9-48-60-24-PC16-EV |
| DIMENSIONS: | TOTAL WEIGHT: 34.9 LBS |
| A | 16.57" |
| B | 14.58" |
| C | 9.64" |

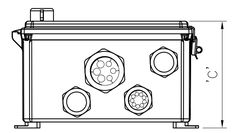


BOTTOM VIEW

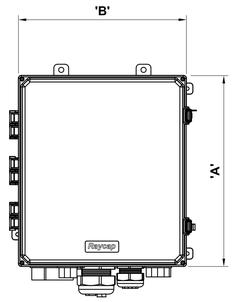


FRONT VIEW

## DC-9 SURGE SUPPRESSOR

24"x36" SCALE: NTS
11"x17" SCALE: NTS

**8**

| CIENA CN 3911 | |
|---|---|
| HEIGHT (H) | 17.2" |
| WIDTH (W) | 16.1" |
| DEPTH (D) | 6.4" |
| WEIGHT | 24 LBS |

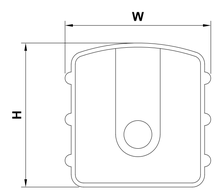


FRONT VIEW

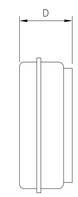


SIDE VIEW

## CIENA CN 3911

24"x36" SCALE: NTS
11"x17" SCALE: NTS

**6**

| EMERSON NETSURE NO. F2013065 NETXTEND FLEX BATTERY ENCLOSURE | |
|---|---|
| HEIGHT (H) | 72" |
| WIDTH (W) | 36" |
| DEPTH (D) | 37" |
| WEIGHT | 778LBS (EMPTY) 2206LBS (FULL) |
| MOUNTING: | PAD/ PLATFORM |

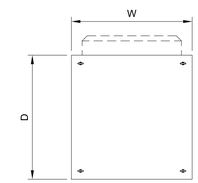


TOP VIEW

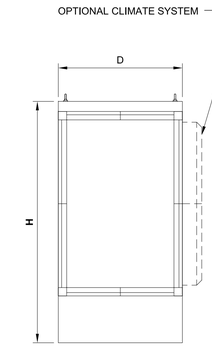


SIDE VIEW

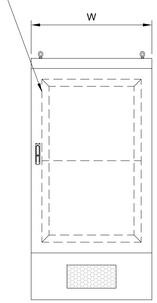


FRONT VIEW

## NETSURE NETXTEND FLEX CABINET

24"x36" SCALE: NTS
11"x17" SCALE: NTS

**3**

| MAXIMUM TORQUE | |
|---|---|
| M8 | 15N.m (11FT.LBS) |
| M10 | 37N.m (27FT.LBS) |
| M12 | 58N.m (43FT.LBS) |

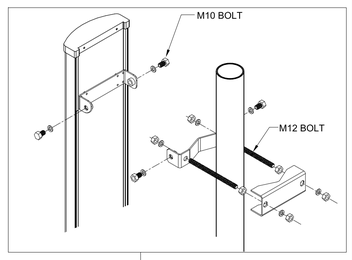


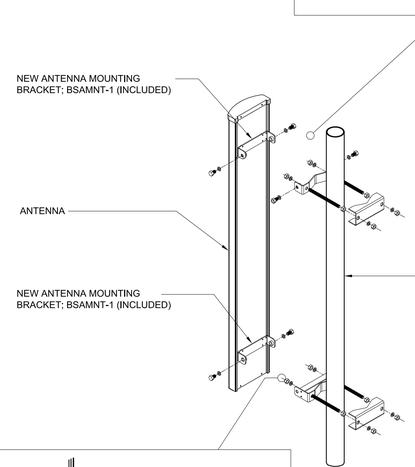


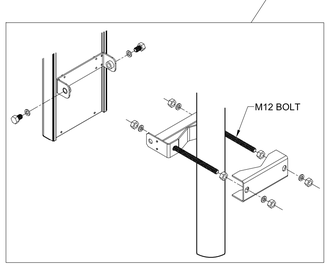


| MAXIMUM TORQUE | |
|---|---|
| M10 | 37N.m (27FT.LBS) |
| M12 | 58N.m (43FT.LBS) |

## ANTENNA MOUNTING DETAIL

24"x36" SCALE: NTS
11"x17" SCALE: NTS

**7**

RAYCAP OVP, DISTRIBUTION & FIBER CABINET SPECIFICATIONS
PART NUMBER: DC50-48-60-96-50F

CONFIGURATION
- TWO-DOOR CONFIGURATION
- DIMENSIONS: 60"H x 40"W x 9"D
- CHAMBERS: WET CHAMBER, DC POWER, FIBER TERMINATION

POWER SECTION:
- UP TO 400A INPUT PER EA. 25-CIRCUIT DISTRIBUTION BANK (X2)
- (2) 2.5" CONDUIT FITTINGS FOR DC INPUT FROM WIC/WUC
- GLANDS FOR UP TO (17) 8AWG, 6AWG, OR 4AWG 3-PAIR DC TRUNKS

FIBER SECTION:
- 96 LC DUPLEX FIBER PORTS
- (2) 2.5" CONDUIT FITTINGS FOR FIBER INPUT FROM WIC/WUC
- (8) FIBER DIVIDER HEAD MOUNTING BRACKETS
- GLANDS FOR UP TO (6) FIBER TRUNKS TO TOWER/ROOFTOP

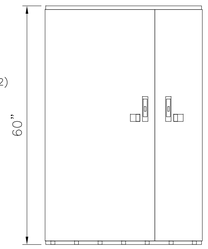


FRONT VIEW

SIDE VIEW

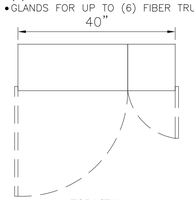


TOP VIEW

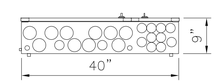


BOTTOM VIEW

## RAYCAP DC50 BOX

24"x36" SCALE: NTS
11"x17" SCALE: NTS

**5**

| EMERSON NETSURE 512 DC POWER SYSTEM W/ NETXTEND FLEX CABINET - F2012504 -48VDC/+24VDC POWER & BATTERY ENCLOSURE | |
|---|---|
| HEIGHT (H) | 72" |
| WIDTH (W) | 32" |
| DEPTH (D) | 39" |
| WEIGHT | 690LBS (EMPTY) 2300 LBS (FULL) |
| MOUNTING: | PAD/ PLATFORM |

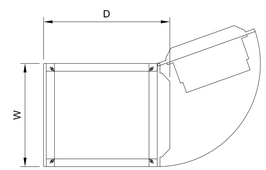


TOP VIEW

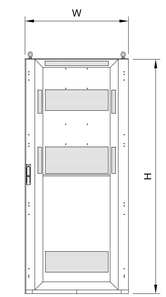


FRONT VIEW

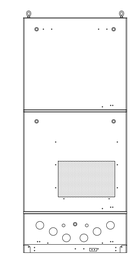

REAR VIEW

## NETSURE 512 DC POWER SYSTEM

24"x36" SCALE: NTS
11"x17" SCALE: NTS

**2**

| COMMSCOPE NNH4-65B-R6H4 | |
|---|---|
| HEIGHT (H) | 71.606" |
| WIDTH (W) | 19.606" |
| DEPTH (D) | 7.756" |
| WEIGHT | 84.437 LBS. |
| SURVIVAL WIND SPEED: | 149.75 MPH |
| CONNECTOR: | (8) 4.3-10 DIN FEMALE - BOTTOM |
| MOUNTING POLE: | 2 - 5 INCHES |

FRONT OF ANTENNA

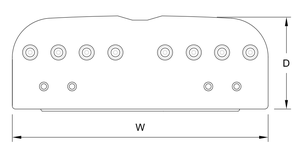


BOTTOM VIEW

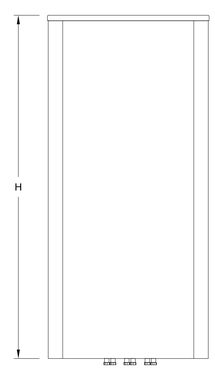


FRONT VIEW

SIDE VIEW

## COMMSCOPE PANEL ANTENNA

24"x36" SCALE: NTS
11"x17" SCALE: NTS

**4**

| ERICSSON PURCELL FLX21 CABINET | |
|---|---|
| HEIGHT (H) | 39.7" |
| WIDTH (W) | 25.3" |
| DEPTH (D) | 30.0" |
| WEIGHT (EA.) | 105LBS (EMPTY) 525LBS (FULL) |

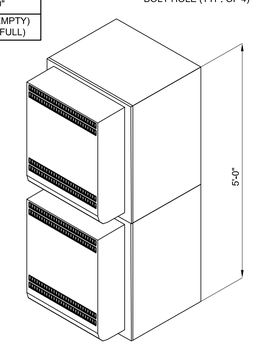


ISOMETRIC VIEW

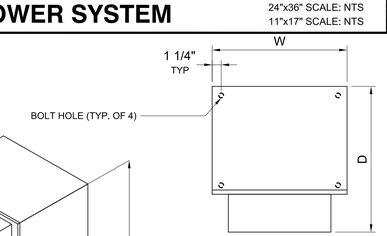


PLAN VIEW

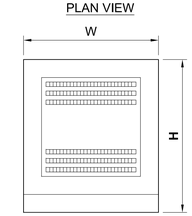


FRONT VIEW

## PURCELL FLX21 CABINET

24"x36" SCALE: NTS
11"x17" SCALE: NTS

**1**

ISSUED FOR:

KIRKWOOD PLAZA SHOPPING CENTER
1630 W CAMPBELL AVE.,
CAMPBELL, CA 95008

at&t
5001 EXECUTIVE PARKWAY
SAN RAMON, CALIFORNIA 94583

EPIC WIRELESS GROUP LLC
Connecting a Wireless World

M SQUARED WIRELESS
1387 CALLE AVANZADO
SAN CLEMENTE CA 92673 (949) 391-6824

| | |
|---|---|
| AT&T SITE NO: | CCL01280 |
| PROJECT NO: | 13334607 |
| DRAWN BY: | SD |
| CHECKED BY: | MF |

| REV | DATE | DESCRIPTION | BY |
|---|---|---|---|
| 2 | 12/22/2022 | 100% CD'S REVISED | SP |
| 1 | 12/19/2022 | 100% CD'S FOR SUBMITTAL | BM |
| 0 | 11/30/2022 | 100% CD'S FOR REVIEW | BM |
| C | 02/01/2022 | 95% CD'S REVISED – RLS | BM |
| B | 12/20/2021 | 90% CD'S FOR REV-RLS | DR |
| A | 11/29/2021 | 90% CD'S FOR REVIEW | BM |

LICENSOR:

REGISTERED PROFESSIONAL ENGINEER
WELLS HOLMES
S 8203
STRUCTURAL
STATE OF CALIFORNIA

12/22/2022

IT IS A VIOLATION OF LAW FOR ANY PERSON, UNLESS THEY ARE ACTING UNDER THE DIRECTION OF A LICENSED PROFESSIONAL ENGINEER, TO ALTER THIS DOCUMENT.

SHEET TITLE

DETAILS

SHEET NUMBER

**D-1**

| | |
|---|---|
| ERICSSON | 4426 B66 |
| HEIGHT (H) | 14.96" |
| WIDTH (W) | 13.19" |
| DEPTH (D) | 5.8" |
| WEIGHT | 48.4 LBS. |

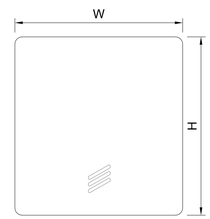


FRONT VIEW

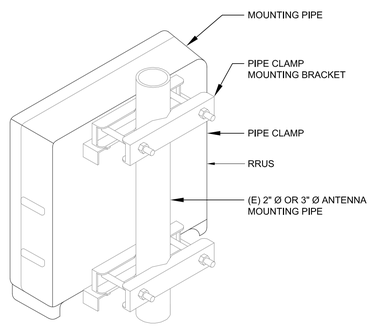


ISO VIEW

## ERICSSON RRUS 4426 B66

24"x36" SCALE: NTS
11"x17" SCALE: NTS

**9**

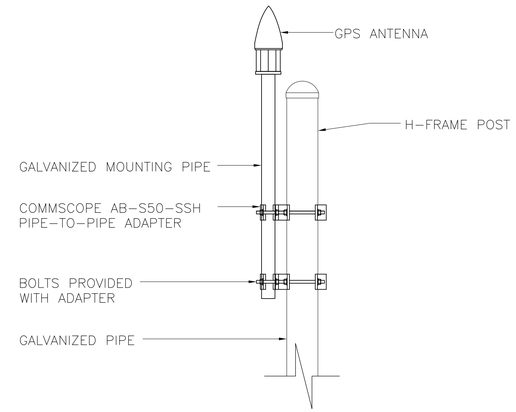


## LUCENT LOW GAIN GPS ANTENNA

24"x36" SCALE: NTS
11"x17" SCALE: NTS

**6**

| MANUFACTURER: | | ERICSSON |
|---|---|---|
| MODEL NO.: | | RRUS 4449 B5/B12 |
| DIMENSIONS: | | TOTAL WEIGHT : |
| A | 15" | |
| B | 13.2" | 70 LBS (31.7 kg) |
| C | 9.3" | |

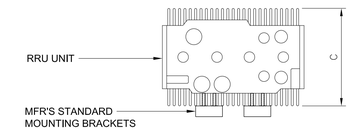


BOTTOM VIEW

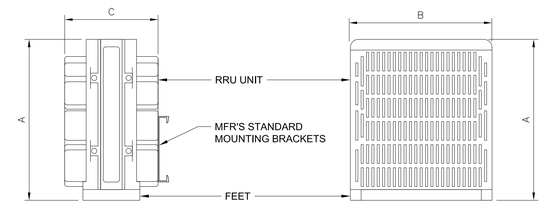


SIDE VIEW

FRONT VIEW

## ERICSSON RRUS 4449 B5/B12

24"x36" SCALE: NTS
11"x17" SCALE: NTS

**3**

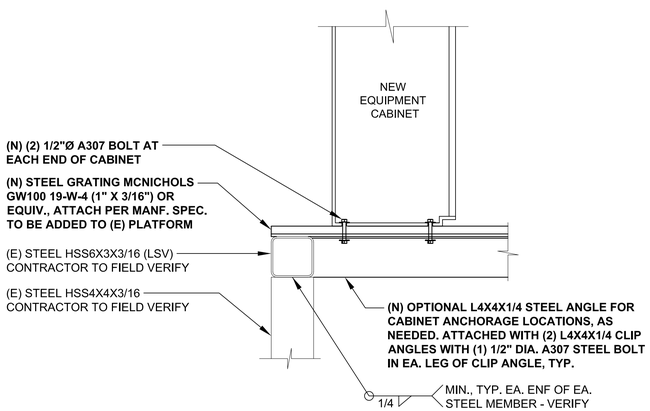


## EQUIPMENT ANCHORAGE

24"x36" SCALE: NTS
11"x17" SCALE: NTS

**8**

| MANUFACTURER: | | ERICSSON |
|---|---|---|
| MODEL NO.: | | RRUS 2012 B29 |
| DIMENSIONS: | | TOTAL WEIGHT : |
| HEIGHT (H) | 20.4" | |
| WIDTH (W) | 18.5" | 58 LBS (26.3 kg) |
| DEPTH (D) | 7.5" | |

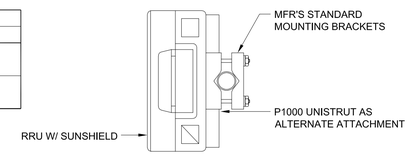


TOP VIEW

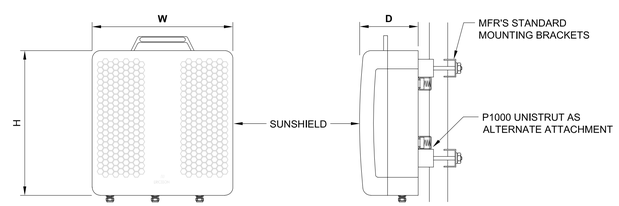


FRONT VIEW

SIDE VIEW

## ERICSSON RRUS 2012 B29

24"x36" SCALE: NTS
11"x17" SCALE: NTS

**5**

| MANUFACTURER: | | ERICSSON |
|---|---|---|
| MODEL NO.: | | RRUS 8843 B2/B66A |
| DIMENSIONS: | | TOTAL WEIGHT : |
| A | 18" | |
| B | 13.2" | 75 LBS (34 kg) |
| C | 11.3" | |

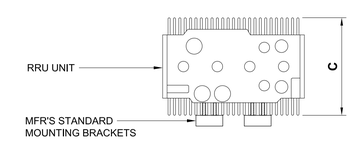


BOTTOM VIEW

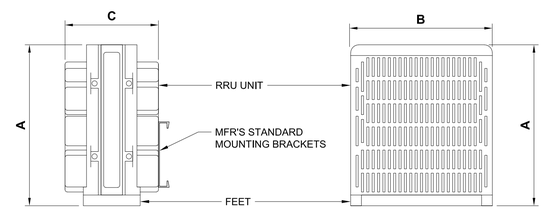


SIDE VIEW

FRONT VIEW

## ERICSSON RRU 8843 B2/B66A

24"x36" SCALE: NTS
11"x17" SCALE: NTS

**2**

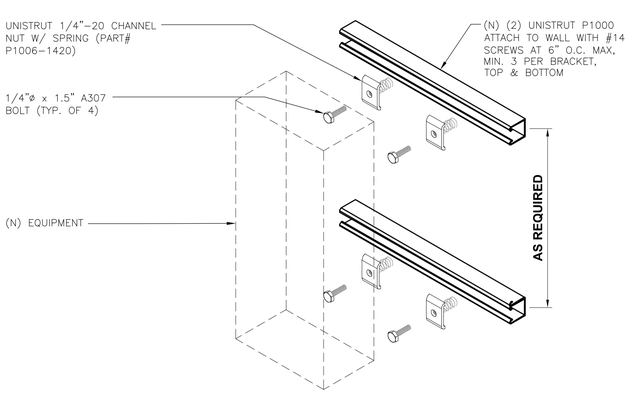


## EQUIPMENT MOUNTING DETAIL

24"x36" SCALE: NTS
11"x17" SCALE: NTS

**7**

| MANUFACTURER: | | ERICSSON |
|---|---|---|
| MODEL NO.: | | RRUS 4478 B14 |
| DIMENSIONS: | | TOTAL WEIGHT : |
| A | 16.5" | |
| B | 13.4" | 59.9 LBS (27.2 kg) |
| C | 7.7" | |

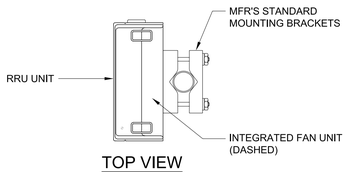


TOP VIEW

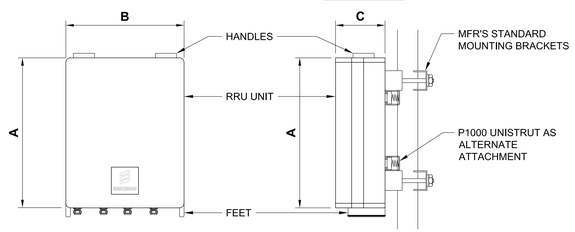


FRONT VIEW

SIDE VIEW

## ERICSSON RRUS 4478 B14

24"x36" SCALE: NTS
11"x17" SCALE: NTS

**4**

| MANUFACTURER: | | ERICSSON |
|---|---|---|
| MODEL NO.: | | RRUS 4415 B30 |
| DIMENSIONS: | | TOTAL WEIGHT : |
| A | 16.5" | |
| B | 13.4" | 46 LBS (21 kg) |
| C | 5.9" | |

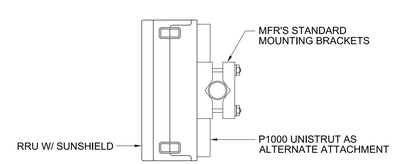


TOP VIEW

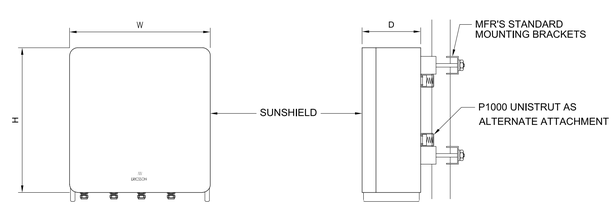


FRONT VIEW

SIDE VIEW

## RRUS 4415 B30

24"x36" SCALE: NTS
11"x17" SCALE: NTS

**1**

ISSUED FOR:

KIRKWOOD PLAZA SHOPPING CENTER
1630 W CAMPBELL AVE.,
CAMPBELL, CA 95008

at&t
5001 EXECUTIVE PARKWAY
SAN RAMON, CALIFORNIA 94583

EPIC WIRELESS GROUP LLC
Connecting a Wireless World

M SQUARED WIRELESS
1387 CALLE AVANZADO
SAN CLEMENTE CA 92673 (949) 391-6824

| | |
|---|---|
| AT&T SITE NO: | CCL01280 |
| PROJECT NO: | 13334607 |
| DRAWN BY: | SD |
| CHECKED BY: | MF |

| REV | DATE | DESCRIPTION | BY |
|---|---|---|---|
| | | | |
| | | | |
| | | | |
| 2 | 12/22/2022 | 100% CD'S REVISED | SP |
| 1 | 12/19/2022 | 100% CD'S FOR SUBMITTAL | BM |
| 0 | 11/30/2022 | 100% CD'S FOR REVIEW | BM |
| C | 02/01/2022 | 95% CD'S REVISED - RLS | BM |
| B | 12/20/2021 | 90% CD'S FOR REV-RLS | DR |
| A | 11/29/2021 | 90% CD'S FOR REVIEW | BM |

LICENSOR:

REGISTERED PROFESSIONAL ENGINEER
WELLS HOLMES
S 5203
STRUCTURAL
STATE OF CALIFORNIA

12/22/2022

IT IS A VIOLATION OF LAW FOR ANY PERSON, UNLESS THEY ARE ACTING UNDER THE DIRECTION OF A LICENSED PROFESSIONAL ENGINEER, TO ALTER THIS DOCUMENT.

SHEET TITLE

DETAILS

SHEET NUMBER

**D-2**

# FOR REFERENCE ONLY

## SAFETY DATA SHEET

EnerSys. Powerful Solutions.

Form #: SDS 85307
Revised: AG
Supersedes: AF
ECO #: 1002195

**I. PRODUCT IDENTIFICATION**

**Chemical Trade Name (as used on label):**
Cyclon®, Odyssey, Genesis®, SBS, XE®, Armaule Plus®, MILPC, Nexsys, or Large TPPL

**Synonyms:**
Sealed Lead Acid Battery, VRLA Battery

**Manufacturer's Name/Address:**
EnerSys Energy Products Inc. — Canada Corporate Office
4517 N. Ridgeview Drive — 3-61 Parr Boulevard
Warrensburg, MO 64093-9301 — Bolton, Ontario L7E 4E8

**Chemical Family/Classification:**
Sealed Lead Battery

**Telephone:**
For information and emergencies, contact EnerSys Energy Products Environmental, Health & Safety Dept. at 660-429-2165

**24 Hour Emergency Response Contact:**
CHEMTREC DOMESTIC: 800-424-9300 CHEMTREC INTL: 703-527-3877

**II GHS HAZARDS IDENTIFICATION**

| HEALTH | ENVIRONMENTAL | PHYSICAL |
|---|---|---|
| Acute Toxicity (Oral/Dermal/Inhalation) — Category 4 | Aquatic Chronic 1 | Explosive Chemical, Division 1.3 |
| Skin Corrosion/Irritation — Category 1A | Aquatic Acute 1 | |
| Eye Damage — Category 1 | | |
| Reproductive — Category 1A | | |
| Carcinogenicity (lead compounds) — Category 1B | | |
| Carcinogenicity (acid mist) — Category 1A | | |
| Specific Target Organ Toxicity (repeated exposure) — Category 2 | | |

**GHS LABEL:**

HEALTH ENVIRONMENTAL PHYSICAL

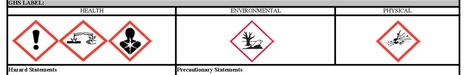

**Hazard Statements**
DANGER!
Causes severe skin burns and serious eye damage.
May damage fertility or the unborn child if ingested or inhaled
May cause cancer if ingested or inhaled.
Causes damage to central nervous system, blood and kidneys through prolonged or repeated exposure.
May form explosive air/gas mixture during charging.
Explosive, fire, blast, or projection hazard.
May cause harm to breast-fed children.
Harmful if swallowed, inhaled, or contact with skin
Causes skin irritation, serious eye damage.

**Precautionary Statements**
Wash thoroughly after handling.
Do not eat, drink or smoke when using this product.
Wear protective gloves/protective clothing, eye protection/face protection.
Avoid breathing dust/fume/gas/mist/vapors/spray.
Use only outdoors or in a well-ventilated area.
Contact with internal components may cause irritation or severe burns. Avoid contact with internal acid.
Irritating to eyes, respiratory system, and skin.
Obtain special instructions before use.
Do not handle until all safety precautions have been read and understood
Avoid contact during pregnancy/while nursing
Keep away from heat./sparks/open flames/hot surfaces. No smoking

**III. COMPOSITION/INFORMATION ON INGREDIENTS**

| Components | CAS Number | Approximate % by Weight |
|---|---|---|
| **Inorganic Lead Compound:** | | |
| Lead | 7439-92-1 | 45 - 60 |
| Lead Dioxide | 1309-60-0 | 15 - 25 |
| Tin | 7440-31-5 | 0.1 - 0.2 |
| **Sulfuric Acid Electrolyte (Sulfuric Acid/Water)** | 7664-93-9 | 15 - 20 |
| **Case Material:** | | 5 - 10 |
| Polypropylene | 9003-07-0 | |
| Polystyrene | 9003-53-6 | |
| Styrene Acrylonitrile | 9003-54-7 | |
| Acrylonitrile Butadiene Styrene | 9003-56-9 | |
| Styrene Butadiene | 9003-55-8 | |
| Polyvinylchloride | 9002-86-2 | |
| Polycarbonate, Hard Rubber, Polyethylene | 9002-88-4 | |
| Polyphenylene Oxide | 25134-01-4 | |
| Polycarbonate/Polyester Alloy | -- | |
| **Other:** | | |
| Absorbent Glass Mat | -- | 1 - 2 |



## SAFETY DATA SHEET

EnerSys. Powerful Solutions.

Form #: SDS 85307
Revised: AG
Supersedes: AF
ECO #: 1002195

Lead Compounds: May cause eye irritation.

**Effects of Overexposure - Acute:**
Sulfuric Acid: Severe skin irritation, damage to cornea, upper respiratory irritation.
Lead Compounds: Symptoms of toxicity include headache, fatigue, abdominal pain, loss of appetite, muscle aches and weakness, sleep disturbances and irritability.

**Effects of Overexposure - Chronic:**
Sulfuric Acid: Possible erosion of tooth enamel, inflammation of nose, throat and bronchial tubes.
Lead Compounds: Anemia; neuropathy, particularly of the motor nerves, with wrist drop; kidney damage; reproductive changes in males and females. Repeated exposure to lead and lead compounds in the workplace may result in nervous system toxicity. Some toxicologists report abnormal conduction velocities in persons with blood lead levels of 50mcg/100 ml or higher. Heavy lead exposure may result in central nervous system damage, encephalopathy and damage to the blood-forming (hematopoietic) tissues.

**Carcinogenicity:**
Sulfuric Acid: The International Agency for Research on Cancer (IARC) has classified "strong inorganic acid mist containing sulfuric acid" as a Group 1 carcinogen, a substance that is carcinogenic to humans. This classification does not apply to liquid forms of sulfuric acid or sulfuric acid solutions contained within a battery. Inorganic acid mist (sulfuric acid mist) is not generated under normal use of this product. Misuse of the product, such as overcharging, may result in the generation of sulfuric acid mist.
Lead Compounds: Lead is listed as a Group 2A carcinogen, likely in animals at extreme doses. Per the guidance found in OSHA 29 CFR 1910.1200 Appendix F, this is approximately equivalent to GHS Category 1B. Proof of Carcinogenicity in humans is lacking at present.

**Medical Conditions Generally Aggravated by Exposure:**
Overexposure to sulfuric acid mist may cause lung damage and aggravate pulmonary conditions. Contact of sulfuric acid with skin may aggravate diseases such as eczema and contact dermatitis. Lead and its compounds can aggravate some forms of kidney, liver and neurologic diseases.

**Acute Toxicity:**
Inhalation LD50:
Electrolyte: LC50 rat: 375 mg/m3; LC50: guinea pig: 510 mg/m3
Elemental Lead: Acute Toxicity Point Estimate = 4500 ppmV (based on lead bullion)

**Oral LD50:**
Electrolyte: rat: 2140 mg/kg
Elemental Lead: Acute Toxicity Estimate (ATE) = 500 mg/kg body weight (based on lead bullion)

**Additional Health Data:**
All heavy metals, including the hazardous ingredients in this product, are taken into the body primarily by inhalation and ingestion.
Most inhalation problems can be avoided by adequate precautions such as ventilation and respiratory protection covered in Section 8.
Follow good personal hygiene to avoid inhalation and ingestion: wash hands, face, neck and arms thoroughly before eating, smoking or leaving the workplace. Keep contaminated clothing out of non-contaminated areas, or wear cover clothing when in such areas. Restrict the use and presence of food, tobacco and cosmetics to non-contaminated areas. Work clothes and work equipment used in contaminated areas must remain in designated areas and never taken home or laundered with personal non-contaminated clothing. This product is intended for industrial use only and should be isolated from children and their environment.

The 9th Amendment to EC Directive 67/548/EEC classified lead compounds, but not lead in metal form, as possibly toxic to reproduction.
Risk phrase 61 May cause harm to the unborn child, applies to lead compounds, especially soluble forms.

**VII. ECOLOGICAL INFORMATION**

**Environmental Fate:**
Lead is very persistent in soil and sediments. No data on environmental degradation. Mobility of metallic lead between ecological compartments is slow. Bioaccumulation of lead occurs in aquatic and terrestrial animals and plants but little bioaccumulation occurs through the food chain. Most studies include lead compounds and not elemental lead.

**Environmental Toxicity:** Aquatic Toxicity:
Sulfuric acid: 24-hr LC50, freshwater fish (Brachydanio rerio): 82 mg/L
96 hr. LOEC, freshwater fish (Cyprinus carpio): 22 mg/L
Lead: 48 hr LC50 (modeled for aquatic invertebrates): <1 mg/L, based on lead bullion

**Additional Information:**
- No known effects on stratospheric ozone depletion.
- Volatile organic compounds: 0% (by Volume)
- Water Endangering Class (WGK): NA

**VIII. DISPOSAL CONSIDERATIONS (UNITED STATES)**

**Spent batteries:** Send to secondary lead smelter for recycling. Spent lead-acid batteries are not regulated as hazardous waste when the requirements of 40 CFR Section 266.80 are met. This should be managed in accordance with approved local, state and federal requirements. Consult state environmental agency and/or federal EPA.

**Electrolyte:**
Place neutralized slurry into sealed containers and handle as applicable with state and federal regulations. Large water-diluted spills, after neutralization and testing, should be managed in accordance with approved local, state and federal requirements. Consult state environmental agency and/or federal EPA.
Following local, State/Provincial, and Federal/National regulations applicable to end-of-life characteristics will be the responsibility of the end-user.

**IX. TRANSPORT INFORMATION**

**U.S. DOT:**
Excepted from the hazardous materials regulations (HMR) because the batteries meet the requirements of 49 CFR 173.159(d) and 49 CFR 173.159a of the U.S. Department of Transportation's HMR. Battery and outer package must be marked "NONSPILLABLE" or "NONSPILLABLE BATTERY"



## SAFETY DATA SHEET

EnerSys. Powerful Solutions.

Form #: SDS 85307
Revised: AG
Supersedes: AF
ECO #: 1002195

Inorganic lead and sulfuric acid electrolyte are the primary components of every battery manufactured by EnerSys Energy Products.
There are no mercury or cadmium containing products present in batteries manufactured by EnerSys Energy Products.

**IV. FIRST AID MEASURES**

**Inhalation:**
Sulfuric Acid: Remove to fresh air immediately. If breathing is difficult, give oxygen. Consult a physician
Lead: Remove from exposure, gargle, wash nose and lips; consult physician.

**Ingestion:**
Sulfuric Acid: Give large quantities of water; do not induce vomiting or aspiration into the lungs may occur and can cause permanent injury or death; consult a physician
Lead: Consult physician immediately.

**Skin:**
Sulfuric Acid: Flush with large amounts of water for at least 15 minutes; remove contaminated clothing completely, including shoes. If symptoms persist, seek medical attention. Wash contaminated clothing before reuse. Discard contaminated shoes
Lead: Wash immediately with soap and water.

**Eyes:**
Sulfuric Acid and Lead: Flush immediately with large amounts of water for at least 15 minutes while lifting lids
Seek immediate medical attention if eyes have been exposed directly to acid.

**V. FIRE FIGHTING MEASURES**

**Flash Point:** N/A **Flammable Limits:** LEL = 4.1% (Hydrogen Gas) UEL = 74.2% (Hydrogen Gas)

**Extinguishing Media:** Carbon dioxide; foam; dry chemical. Avoid breathing vapors. Use appropriate media for surrounding fire.

**Special Fire Fighting Procedures:**
If batteries are on charge, shut off power. Use positive pressure, self-contained breathing apparatus. Water applied to electrolyte generates heat and causes it to spatter. Wear acid-resistant clothing, gloves, face and eye protection.
Note that strings of series connected batteries may still pose risk of electric shock even when charging equipment is shut down.

**Unusual Fire and Explosion Hazards:**
Highly flammable hydrogen gas is generated during charging and operation of batteries. To avoid risk of fire or explosion, keep sparks or other sources of ignition away from batteries. Do not allow metallic materials to simultaneously contact negative and positive terminals of cells and batteries. Follow manufacturer's instructions for installation and service.

**VI. ACCIDENTAL RELEASE MEASURES**

**Spill or Leak Procedures:**
Stop flow of material, contain/absorb small spills with dry sand, earth, and vermiculite. Do not use combustible materials. If possible, carefully neutralize spilled electrolyte with soda ash, sodium bicarbonate, lime, etc. Wear acid-resistant clothing, boots, gloves, and face shield. Do not allow discharge of unneutralized acid to sewer. Acid must be managed in accordance with local, state, and federal requirements.
Consult state environmental agency and/or federal EPA.

**VII. HANDLING AND STORAGE**

**Handling:**
Unless involved in recycling operations, do not breach the casing or empty the contents of the battery.
There may be increasing risk of electric shock from strings of connected batteries
Keep containers tightly closed when not in use. If battery case is broken, avoid contact with internal components.
Keep vent caps on and cover terminals to prevent short circuits. Place cardboard between layers of stacked automotive batteries to avoid damage and short circuits.
Keep away from combustible materials, organic chemicals, reducing substances, metals, strong oxidizers and water. Use banding or stretch wrap to secure items for shipping.

**Storage:**
Store batteries in cool, dry, well-ventilated areas with impervious surfaces and adequate containment in the event of spills. Batteries should also be stored under roof for protection against adverse weather conditions. Separate from incompatible materials. Store and handle only in areas with adequate water supply and spill control. Avoid damage to containers. Keep away from fire, sparks and heat. Keep away from metallic objects which could bridge the terminals on a battery and create a dangerous short-circuit

**Charging:**
There is a possible risk of electric shock from charging equipment and from strings of series connected batteries, whether or not being charged. Shut-off power to chargers whenever not in use and before detachment of any circuit connections. Batteries being charged will generate and release flammable hydrogen gas. Charging space should be ventilated. Keep battery vent caps in position. Prohibit smoking and avoid creation of flames and sparks nearby. Wear face and eye protection when near batteries being charged.

**VIII. EXPOSURE CONTROLS/PERSONAL PROTECTION**

**Exposure Limits (mg/m3) Note: N.E.= Not Established**

| INGREDIENTS (Chemical/Common Names) | OSHA PEL | ACGIH | US NIOSH | Quebec PEV | Ontario OEL | EU OEL |
|---|---|---|---|---|---|---|
| Lead and Lead Compounds (inorganic) | 0.05 | 0.05 | 0.05 | 0.05 | 0.05 | 0.15 (h) |
| Tin | 2 | 2 | 2 | 2 | 2 | N.E. |
| Sulfuric Acid Electrolyte | 1 | 0.2 | 1 | 1 | 0.2 | 0.05 (c) |
| Polypropylene | N.E. | N.E | N.E | N.E | N.E | N.E |
| Polystyrene | N.E. | N.E | N.E | N.E | N.E | N.E |
| Styrene Acrylonitrile | N.E. | N.E | N.E | N.E | N.E | N.E |
| Acrylonitrile Butadiene Styrene | N.E | N.E | N.E | N.E | N.E | N.E |
| Styrene Butadiene | N.E | N.E | N.E | N.E | N.E | N.E |
| Polyvinylchloride | N.E | N.E | N.E | N.E | 1 | 1 |



## SAFETY DATA SHEET

EnerSys. Powerful Solutions.

Form #: SDS 85307
Revised: AG
Supersedes: AF
ECO #: 1002195

| | | | | | | |
|---|---|---|---|---|---|---|
| Polycarbonate, Hard Rubber, Polyethylene | N.E | N.E | N.E | N.E | N.E | N.E |
| Polyphenylene Oxide | N.E | N.E | N.E | N.E | N.E | N.E |
| Polycarbonate/Polyester Alloy Rubber, Polyethylene | N.E | N.E | N.E | N.E | N.E | N.E |
| Absorbent Glass Mat | N.E | N.E | N.E | N.E | N.E | N.E |

**NOTES:**
(b) As inhalable aerosol
(c) Thoracic fraction

**Engineering Controls (Ventilation):**
Store and handle in well-ventilated area. If mechanical ventilation is used, components must be acid-resistant.
Handle batteries cautiously to avoid spills. Make certain vent caps are on securely. Avoid contact with internal components. Wear protective clothing, eye and face protection when filling, charging or handling batteries. Do not allow metallic materials to simultaneously contact both the positive and negative terminals of the batteries. Charge the batteries in areas with adequate ventilation. General dilution ventilation is acceptable.

**Respiratory Protection (NIOSH/MSHA approved):**
None required under normal conditions. When concentrations of sulfuric acid mist are known to exceed the PEL, use NIOSH or MSHA-approved respiratory protection.

**Skin Protection:**
If battery case is damaged, use rubber or plastic acid-resistant gloves with elbow-length gauntlet, acid-resistant apron, clothing and boots

**Eye Protection:**
If battery case is damaged, use chemical goggles or face shield.

**Other Protection:**
Under severe exposure emergency conditions, wear acid-resistant clothing and boots.

**IX. PHYSICAL AND CHEMICAL PROPERTIES**

**Properties Listed Below are for Electrolyte:**

| | | | |
|---|---|---|---|
| **Boiling Point:** | 203 - 240° F | **Specific Gravity (H2O = 1):** | 1.215 to 1.350 |
| **Melting Point:** | N/A | **Vapor Pressure (mm Hg):** | 10 |
| **Solubility in Water:** | 100% | **Vapor Density (AIR = 1):** | Greater than 1 |
| **Evaporation Rate: (Butyl Acetate = 1)** | Less than 1 | **% Volatile by Weight:** | N/A |
| **pH:** | <1 to 2 | **Flash Point:** | Below room temperature (as hydrogen gas) |
| **LFL (Lower Explosive Limit)** | 4.1% (Hydrogen) | **UFL (Upper Explosive Limit)** | 74.2% (Hydrogen) |
| **Appearance and Odor:** | Manufactured article; no apparent odor. Electrolyte is a clear liquid with a sharp, penetrating, pungent odor. | | |

**X. STABILITY AND REACTIVITY**

**Stability:** Stable X Unstable

**This product is stable under normal conditions at ambient temperature**

**Conditions To Avoid:** Prolonged overcharge; sources of ignition

**Incompatibility: (Materials to avoid)**
Sulfuric Acid: Contact with combustibles and organic materials may cause fire and explosion. Also reacts violently with strong reducing agents, metals, sulfur trioxide gas, strong oxidizers and water. Contact with metals may produce toxic sulfur dioxide fumes and may release flammable hydrogen gas.
Lead Compounds: Avoid contact with strong acids, bases, halides, halogenates, potassium nitrate, permanganate, peroxides, nascent hydrogen and reducing agents.

**Hazardous Decomposition Products:**
Sulfuric Acid: Sulfur trioxide, carbon monoxide, sulfuric acid mist, sulfur dioxide, and hydrogen sulfide.
Lead Compounds: High temperatures likely to produce toxic metal fume, vapor, or dust; contact with strong acid or base or presence of nascent hydrogen may generate highly toxic arsine gas.

**Hazardous Polymerization:**
Will not occur

**XI. TOXICOLOGICAL INFORMATION**

**Routes of Entry:**
Sulfuric Acid: Harmful by all routes of entry.
Lead Compounds: Hazardous exposure can occur only when product is heated, oxidized or otherwise processed or damaged to create dust, vapor or fume. The presence of nascent hydrogen may generate highly toxic arsine gas.

**Inhalation:**
Sulfuric Acid: Breathing of sulfuric acid vapors or mists may cause severe respiratory irritation.
Lead Compounds: Inhalation of lead dust or fumes may cause irritation of upper respiratory tract and lungs.

**Ingestion:**
Sulfuric Acid: May cause severe irritation of mouth, throat, esophagus and stomach.
Lead Compounds: Acute ingestion may cause abdominal pain, nausea, vomiting, diarrhea and severe cramping. This may lead rapidly to systemic toxicity and must be treated by a physician.

**Skin Contact:**
Sulfuric Acid: Severe irritation, burns and ulceration.
Lead Compounds: Not absorbed through the skin.

**Eye Contact:**
Sulfuric Acid: Severe irritation , burns, corneal damage, and blindness.



## SAFETY DATA SHEET

EnerSys. Powerful Solutions.

Form #: SDS 85307
Revised: AG
Supersedes: AF
ECO #: 1002195

Battery terminals must be protected against short circuits.

**IATA Dangerous Goods Regulations DGR:**
Excepted from the dangerous goods regulations because the batteries meet the requirements of Packing Instruction 872 and Special Provisions A67 of the International Air Transportation Association (IATA) Dangerous goods Regulations and International Civil Aviation Organization (ICAO) Technical Instructions. Battery Terminals must be protected against short circuits.

The words " NOT RESTRICTED", SPECIAL PROVISION A67" must be provided when the air waybill is issued.

**IMDG:**
Excepted from the dangerous goods regulations for transport by sea because the batteries meet the requirements of Special Provision 238 of the International Maritime Dangerous Goods (IMDG CODE). Battery terminals must be protected against short circuits.

**Requirements for Safe Shipping and Handling of Cyclon Cells:**
Warning – Electrical Fire Hazard – Protect against shorting. Terminals can short and cause a fire if not insulated during shipping. Cyclon product must be labeled "NONSPILLABLE" during shipping. Follow all federal shipping regulations. See section IX of this sheet and CFR 49 Parts 171 through 180, available online at wwww.gpoaccess.gov.

**Requirements for Shipping Cyclon Product as Single Cells:**
Protective caps or other durable inert material must be used to insulate each terminal of each cell unless cells are shipping in the original packaging from EnerSys, in full box quantities. Protective caps are available for all cell sizes by contacting EnerSys Customer Service at 1-800-464-2837.

**Requirements for Shipping Cyclon Product Assembled Into Multicell Batteries:**
Assembled batteries must have short circuit protection during shipping. Exposed terminals, connectors, or lead wires must be insulated with a durable inert material to prevent exposure during shipping.

**XV. REGULATORY INFORMATION**

**UNITED STATES:**
**EPA SARA Title III:**
Section 302 EPCRA Extremely Hazardous Substances (EHS):
Sulfuric acid is a listed "Extremely Hazardous Substance" under EPCRA, with a Threshold Planning Quantity (TPQ) of 1,000 lbs.
EPCRA Section 302 notification is required if 1000 lbs or more of sulfuric acid is present at one site (40 CFR 370.10). For more information consult 40 CFR Part 355. The quantity of sulfuric acid will vary by battery type. Contact your EnerSys representative for additional information.

Section 304 CERCLA Hazardous Substances:
Reportable Quantity (RQ) for spilled 100% sulfuric acid under CERCLA (Superfund) and
EPCRA (Emergency Planning and Community Right to Know Act) is 1,000 lbs. State and local reportable quantities for spilled sulfuric acid may vary.

Section 311/312 Hazard Categorization:
EPCRA Section 312 Tier Two reporting is required for non-automotive batteries if sulfuric acid is present in quantities of 500 lbs or more and/or if lead is present in quantities of 10,000 lbs or more. For more information consult 40 CFR 370.10 and 40 CFR 370.40

Section 313 EPCRA Toxic Substances:
40 CFR section 372.38 (b) states: If a toxic chemical is present in an article at a covered facility, a person is not required to consider the quantity of the toxic chemical present in such article when determining whether an applicable threshold has been met under § 372.25, § 372.27, or § 372.28 or determining the amount of release to be reported under § 372.30. This exemption applies whether the person received the article from another person or the person produced the article. However, this exemption applies only to the quantity of the toxic chemical present in the article.

Supplier Notification:
This product contains toxic chemicals, which may be reportable under EPCRA Section 313 Toxic Chemical Release Inventory (Form R) requirements.
If you are a manufacturing facility under SIC codes 20 through 39, the following information is provided to enable you to complete the required reports:

| Toxic Chemical | CAS Number | Approximate % by Wt. |
|---|---|---|
| Lead | 7439-92-1 | 45 - 60 |
| Sulfuric Acid Electrolyte (Sulfuric Acid/Water) | 7664-93-9 | 15 – 20 |
| Tin | 7440-31-5 | 0.1 - 0.2 |

See 40 CFR Part 370 for more details.

If you distribute this product to other manufacturers in SIC Codes 20 through 39, this information must be provided with the first shipment of each calendar year.

The Section 313 supplier notification requirement does not apply to batteries, which are "consumer products".

**TSCA:**
TSCA Section 8b – Inventory Status: All chemicals comprising this product are either exempt or listed on the TSCA Inventory.

TSCA Section 12b (40 CFR Part 707.60(b)): No notice of export will be required for articles, except PCB articles, unless the Agency so requires in the context of individual section 5, 6, or 7 actions.

TSCA Section 13 (40 CFR Part 707.20): No import certification required (EPA 305-B-99-001, June 1999, Introduction to the Chemical Import Requirements of the Toxic Substances Control Act, Section IV.A)

**RCRA:**
Spent Lead Acid Batteries are subject to streamlined handling requirements when managed in compliance with 40 CFR section 266.80 or 40 CFR part 273.
Waste sulfuric acid is a characteristic hazardous waste; EPA hazardous waste number D002 (corrosivity) and D008 (lead).

**CAA:**



## SAFETY DATA SHEET

EnerSys. Powerful Solutions.

Form #: SDS 85307
Revised: AG
Supersedes: AF
ECO #: 1002195

EnerSys supports preventative actions concerning ozone depletion in the atmosphere due to emissions of CFC's and other ozone depleting chemicals (ODC's), defined by the USEPA as Class I substances. Pursuant to Section 611 of the Clean Air Act Amendments (CAAA) of 1990, finalized on January 19, 1993, EnerSys established a policy to eliminate the use of Class I ODC's prior to the May 15, 1993 deadline.

**STATE REGULATION (US):**
**Proposition 65:**
Warning: Battery posts, terminals and related accessories contain lead and lead compounds, chemicals known to the State of California to cause cancer and reproductive harm. Batteries also contain other chemicals known to the State of California to cause cancer. Wash hands after handling.

**INTERNATIONAL REGULATIONS:**
Distribution into Quebec to follow Canadian Controlled Product Regulations (CPR) 24(1) and 24(2).

Distribution into the EU to follow applicable Directives to the Use, Import/Export of the product as-sold.

Article 33 (1) of the REACH regulation (Reg. EC 1907/2006), which entered into force on 1st of June 2007 in the European Union, requires that manufacturers communicate the presence of Substances of Very High Concern (SVHC) in articles (lead batteries) in concentration greater than 0.1% by weight.

Effective the 27th of June 2018, the European Chemical Agency (ECHA) updated the Candidate List with the inclusion of Lead Metal (CAS No.: 7439-92-1). This inclusion of Lead as an SVHC applies to all of EnerSys Lead based battery products regardless of the design (Flooded, Gel, AGM, etc. ).

**XVI. OTHER INFORMATION**

**Revised:** 4/7/2020

**NFPA Hazard Rating for Sulfuric Acid:**
Flammability (Red) = 0 Reactivity (Yellow) = 2
Health (Blue) = 3 Sulfuric acid is water-reactive if concentrated.

**DISCLAIMER**
This Safety Data Sheet is created by the manufacturer to comply with the requirements of 29 CFR 1910.1200. To the extent allowed by law, the manufacturer hereby expressly disclaims any liability to any third party, including users of this product, including, but not limited to, consequential or other damages, arising out of the use of, or reliance on, this Safety Data Sheet.



### Construction

- Robust positive plates are designed to prolong service life and enhance corrosion resistance
- Separators are low resistance microporous (AGM). The electrolyte is absorbed within the AGM, preventing acid spills in case of accidental damage
- Container and cover in flame retardant UL94-V0 material, highly resistant to shock and vibration
- Terminals are stainless steel front access with top access copper alloy insert. Top and front access terminations provide maximum conductivity
- Self-regulating one way pressure relief valves prevents ingress of atmospheric oxygen

### Installation and Operation

- Space efficient footprint
- VRLA design, reduces maintenance requirements
- Lifting handles for easy handling
- Greater than 10 year life expectancy in float service at 77°F (25°C)
- Increased active material surface area yields great cycling capability
- Operating temperature: -40°F (-40°C) to 122°F (50°C) Recommended temperature: 68°F (20°C) to 86°F (30°C)

### Standards

- Meets criteria for "non-spillable" batteries
- Complies with Telcordia® SR-4228, Network Equipment Building System (NEBS™) Criteria Levels
- The management systems governing the manufacture of this product are ISO 9001:2008 and ISO 14001:2004 certified

### General Specifications

| Cell Type | Nominal Capacity (Ah) 10 hr rate to 1.80V/pc @20°C | Nominal Capacity (Ah) 8 hr rate to 1.75V/pc @77°F | Nominal Dimensions Length in | Length mm | Width in | Width mm | Height in | Height mm | Weight - Volumes Unpacked lbs | Unpacked kg |
|---|---|---|---|---|---|---|---|---|---|---|
| SBS 18F | 31 | 31 | 11.0 | 303 | 3.8 | 97 | 6.3 | 159 | 22.7 | 10.3 |
| SBS 31DF | 38 | 38 | 11.0 | 303 | 3.8 | 97 | 7.2 | 184 | 28.2 | 12.8 |
| SBS 31AF | 62 | 62 | 11.0 | 303 | 3.8 | 97 | 10.4 | 264 | 42.0 | 19.1 |
| SBS 01HF | 92 | 91 | 16.4 | 417 | 4.1 | 105 | 10.1 | 256 | 61.6 | 28.0 |
| SBS 100F | 100 | 100 | 15.6 | 395 | 4.3 | 108 | 11.3 | 287 | 71.9 | 32.6 |
| SBS 112F | 112 | 112 | 22.1 | 561 | 4.9 | 125 | 9.0 | 228 | 90.4 | 41.1 |
| SBS 146F | 145 | 145 | 17.9 | 455 | 6.8 | 173 | 9.4 | 238 | 105.0 | 47.7 |
| SBS 166F | 165 | 165 | 17.9 | 455 | 6.8 | 173 | 10.8 | 273 | 117.4 | 53.3 |
| SBS 170F | 170 | 170 | 22.1 | 561 | 4.9 | 125 | 11.1 | 283 | 115.7 | 52.5 |
| SBS 190F | 190 | 190 | 22.1 | 561 | 4.9 | 125 | 12.4 | 316 | 132.3 | 60.0 |

SBS 18F-B14F SBS C11F SBS 100F-H12F SBS 146F - 190F


ALPINE POWER SYSTEMS
A Division of TFI, Inc. est. 1963
connect@alpinepowersystems.com
877-993-8855

Battery Services for Backup Power
- Battery Installation
- Capacity and Acceptance
- Preventative Maintenance

backup power | telecom | motive power
www.alpinepowersystems.com

connect@alpinepowersystems.com
877-993-8855

ALPINE POWER SYSTEMS
A Division of TFI, Inc. est. 1963

Click to view product web page

PowerSafe® SBS Front Terminal
Telecommunications NEBS™ Certified

## Battery Range Summary

The PowerSafe® SBS® Front Terminal battery further extends the technical leadership of PowerSafe SBS battery product line: not only do PowerSafe SBS Front Terminal monoblocs retain the benefits typically associated with Thin Plate Pure Lead (TPPL) Technology such as long life, high energy density, superior shelf life, etc., they also deliver exceptional cyclic performance in both float and fast charge applications, even in the hottest and harshest operating environments.

Where conventional Valve Regulated Lead Acid (VRLA)/Absorbed Glass Mat (AGM) batteries struggle to cope with harsh conditions and frequent power outages, cutting edge (TPPL) technology makes PowerSafe 12V batteries the perfect solution for the challenging operating conditions of today's telecommunication networks.

PowerSafe SBS batteries are designed to high quality standards and a unique manufacturing methods means superior energy and power, high performance and proven reliability, there is no substitute to PowerSafe SBS Front Terminal batteries.

### Features and Benefits

- Capacity range 31-190Ah
- 12V monobloc configurations
- Multiple string configurations available
- Two year shelf life
- SR4228 compliant
- Proven long service life
- High energy density and cycling capability

EnerSys. Powerful Solutions. RESERVE POWER

Publication No: US-SBSF-RS-004 - January 2014

BATTERY INFORMATION

| BATTERY MODEL | TOTAL # OF BATTERY UNITS INSTALLED | TOTAL ELECTROLYTE VOLUME (GAL) PER UNIT | TOTAL ELECTROLYTE WEIGHT (LBS) PER UNIT | % SULFURIC ACID BY VOL (GAL) = ACID VOLUME / UNIT / ELECTROLYTE VOLUME / UNIT | % SULFURIC ACID BY WEIGHT (LBS) = TOTAL ACID WEIGHT / TOTAL ELECTROLYTE WEIGHT | TOTAL SULFURIC ACID BY VOL (GAL) = TOTAL UNITS X SULFURIC VOL / UNIT | TOTAL SULFURIC ACID BY WIEGHT (LBS) = TOTAL UNITS X SULFURIC WEIGHT / UNIT |
|---|---|---|---|---|---|---|---|
| POWERSAFE SBS FRONT TERMINAL BATTERY | 20 UNITS | 2.34 GAL | 25.3 LBS | 28.20% = 0.66 GAL / 2.34 GAL | 39.92% = 10.1 LBS / 25.3 LBS | 13.2 GAL = 20 UNITS X 0.66 GAL / UNIT | 202 LBS = 20 UNITS X 10.1LBS / UNIT |

ISSUED FOR:
KIRKWOOD PLAZA SHOPPING CENTER
1630 W CAMPBELL AVE.,
CAMPBELL, CA 95008


at&t
5001 EXECUTIVE PARKWAY
SAN RAMON, CALIFORNIA 94583

EPIC WIRELESS GROUP LLC
Connecting a Wireless World

M SQUARED WIRELESS
1387 CALLE AVANZADO
SAN CLEMENTE CA 92673 (949) 391-6824


| | |
|---|---|
| AT&T SITE NO: | CCL01280 |
| PROJECT NO: | 13334607 |
| DRAWN BY: | SD |
| CHECKED BY: | MF |

| REV | DATE | DESCRIPTION | BY |
|---|---|---|---|
| | | | |
| | | | |
| | | | |
| 2 | 12/22/2022 | 100% CD'S REVISED | SP |
| 1 | 12/19/2022 | 100% CD'S FOR SUBMITTAL | BM |
| 0 | 11/30/2022 | 100% CD'S FOR REVIEW | BM |
| C | 02/01/2022 | 95% CD'S REVISED – RLS | BM |
| B | 12/20/2021 | 90% CD'S FOR REV–RLS | DR |
| A | 11/29/2021 | 90% CD'S FOR REVIEW | BM |

LICENSOR:

12/22/2022

IT IS A VIOLATION OF LAW FOR ANY PERSON, UNLESS THEY ARE ACTING UNDER THE DIRECTION OF A LICENSED PROFESSIONAL ENGINEER, TO ALTER THIS DOCUMENT.

SHEET TITLE
BATTERY SPECIFICATIONS

SHEET NUMBER
D-3

# GENERAL ELECTRICAL NOTES

1. SUBMITTAL OF BIO INDICATES CONTRACTOR IS COGNIZANT OF ALL JOB SITE CONDITIONS AND WORK TO BE PREFORMED UNDER THIS CONTRACT.
2. CONTRACTOR SHALL PERFORM ALL FIELD VERIFICATION AND EXAMINATION WORK PRIOR TO THE ORDERING OF THE ELECTRICAL EQUIPMENT AND THE ACTUAL CONSTRUCTION. CONTRACTOR SHALL ISSUE A WRITTEN NOTICE OF ALL FINDINGS TO THE ENGINEER AND OWNER LISTING ALL MALFUNCTIONS, FAULTY, EQUIPMENT, AND DISCREPANCIES.
3. THESE PLANS ARE SCHEMATIC ONLY; CONTRACTOR SHALL FOLLOW AS CLOSELY AS POSSIBLE.
4. ANTENNA MOUNTING HEIGHTS AND AZIMUTHS SHALL BE VERIFIED WITH OWNER PRIOR TO INSTALLATION.
5. CONTRACTOR SHALL PROVIDE ALL LABOR, MATERIALS, INSURANCE, EQUIPMENT, INSTALLATION, CONSTRUCTION TOOLS, TRANSPORTATION, ETC., FOR A COMPLETE AND PROPERLY OPERATIVE SYSTEM ENERGIZED THROUGHOUT AND AS INDICATED ON DRAWINGS, AS SPECIFIED HEREIN AND/OR AS OTHERWISE INDICATED. NOTE THAT CONTRACTOR SHALL SECURE ALL NECESSARY ELECTRICAL PERMITS, AND PAY ALL REQUIRED FEES.
6. IF REQUIRED, CONTRACTOR SHALL COORDINATE WITH LOCAL UTILITY COMPANY FOR CONNECTION OF TEMPORARY AND PERMANENT POWER TO THE SITE. THE TEMPORARY POWER AND ALL HOOK-UP COSTS SHALL BE PAID BY THE CONTRACTOR.
7. ALL MATERIALS AND EQUIPMENT SHALL BE PROPOSED AND IN PERFECT CONDITION WHEN INSTALLED AND SHALL BE OF THE BEST GRADE AND OF THE SAME MANUFACTURER THROUGHOUT FOR EACH CLASS OR GROUP OF EQUIPMENT. EXCEPTIONS TO THIS MAY BE PERMITTED IF PROPOSED REPLACEMENT BREAKERS OR SWITCHES ARE NOT AVAILABLE FOR ORIGINAL ELECTRICAL DISTRIBUTION EQUIPMENT -- ON THAT CASE. RECONDITIONED EQUIPMENT MAY BE PERMISSIBLE IF IT CARRIES ONE (1) YEAR WARRANTY. MATERIALS SHALL BE LISTED AND APPROVED BY UNDERWRITER'S LABORATORY AND SHALL BEAR THE INSPECTION LABEL "J" WHERE SUBJECT TO SUCK APPROVAL. Materials SHALL MEET WITH APPROVAL OF THE DIVISION OF INDUSTRIAL SAFETY AND ALL GOVERNING BODIES HAVING JURISDICTION. MATERIALS SHALL BE MANUFACTURED IN ACCORDANCE WITH APPLICABLE STANDARDS ESTABLISHED BY ANSI, NEMA, AND NBFU.
8. IF CONTRACTOR IS PROPOSING ALTERNATE MATERIALS OR CONSTRUCTION METHODS FROM WHAT IS SPECIFIED IN THE PLANS, CONTRACTOR SHALL SUBMIT SHOP DRAWINGS AND/OR CATALOG CUT-SHEETS TO OWNER FOR APPROVAL PRIOR TO COMMENCEMENT OF THE WORK.
9. ALL ELECTRICAL WORK SHALL BE DONE IN ACCORDANCE WITH CURRENT NATIONAL CODES (NEC2014) AND ALL LOCAL AND STATE CODES (CEC 2016), LAWS, AND ORDINANCES. PROVIDE ALL COMPONENTS AND WIRING SIZES AS REQUIRED TO MEET NEC.
10. EACH CONDUCTOR OF EVERY SYSTEM SHALL BE PERMANENTLY TAGGED IN EACH PANELBOARD,PULLBOX, J-BOX, SWITCH BOX, ETC., IN COMPLIANCE WITH OCCUPATIONAL SAFETY AND HEALTH ADMINISTRATION (O.S.H.A.) REQUIREMENTS.
11. COMPLETE JOB SHALL BE GUARANTEED FOR A PERIOD OF ONE (1) YEAR AFTER THE DATE OF JOB ACCEPTANCE BY OWNER, ANY WORK, MATERIAL OR EQUIPMENT FOUND TO BE FAULTY DURING THAT PERIOD SHALL BE CORRECTED AT ONCE, UPON WRITTEN NOTIFICATION, AT THE EXPENSE OF THE CONTRACTOR.
12. CLEAN WORK SITE DAILY, AND REMOVE ALL DEBRIS RESULTING FROM CONSTRUCTION. LEAVE JOB SITE IN A TIDY AND UNDAMAGED CONDITION.
13. UPON COMPLETION OF WORK, PERFORM CONTINUITY, SHORT CIRCUIT, AND GROUNDING TEST. GROUNDING SYSTEM SHALL BE TESTED BY INDEPENDENT TESTING AGENCY, WITH WRITTEN REPORT SUBMITTED TO THE OWNER FOR REVIEW AND APPROVAL. AFTER APPROVAL, FURNISH ONE COPY OF REPORT TO ENGINEER.
14. PROVIDE OWNER WITH ONE SET OF COMPLETE ELECTRICAL "AS BUILT" DRAWINGS AT THE COMPLETION OF THE JOB, SHOWING ACTUAL EQUIPMENT LOCATIONS, CONDUIT/CABLE ROUTING, PANEL SCHEDULE, AND OTHER DETAILS WITHIN 10 DAYS OF PROJECT COMPLETION. DATE OF JOB COMPLETION SHALL BE THE SATE ON THE CONTRACTOR'S "NOTICE OF COMPLETION" SUBMITTED TO THE OWNER, AFTER SITE INSPECTION AND SIGNOFF BY OWNER.
15. ALL BROCHURES, OPERATING MANUAL, CATALOGS, SHOP DRAWINGS, ETC. SHALL BE TURNED OVER TO OWNER AT JOB COMPLETION.
16. ALL CIRCUIT BREAKERS, FUSES AND ELECTRICAL EQUIPMENT SHALL HAVE AN INTERRUPTING RATING NOT LESS THAN THE MAXIMUM SHORT CIRCUIT CURRENT TO WHICH THEY MAY BE SUBJECTED, AND A MINIMUM OF 10,000 A.I.C.
17. PATCH, REPAIR AND PAINT ANY AREA THAT HAS BEEN DAMAGED IN THE COURSE OF THE ELECTRICAL WORK.
18. IN DRILLING HOLES INTO CONCRETE WHETHER FOR FASTENING OR ANCHORING PURPOSED THORUGH THE FLOOR OR WALLS FOR CONDUIT RUNS, PIPE RUNS, ETC., IT MUST CLEARLY UNDERSTOOD THAT TENDONS AND/OR REINFORCING STEEL WILL NOT BE DRILLED INTO, CUT, OR DAMAGED UNDER ANY CIRCUMSTANCES.
19. EXACT LOCATION OF TENDONS AND/OR REINFORCING STEEL ARE NOT KNOWN AND THEREFORE MUST BE SEARCHED FOR BY APPROPRIATE METHODS, SUCH AS X-RAY EQUIPMENT OR OTHER DEVICES THAT CAN ACCURATELY LOCATE THE REINFORCING AND/OR STEEL TENDONS.
20. ALL EXTERIOR WALL PENETRATIONS SHALL BE SEALED WITH SUITABLE WEATHERPROOF SEALANT. PENETRATIONS IN FIRE RATED WALLS SHALL BE FIRE STOPPED IN ACCORDANCE WITH CURRENT LOCAL BUILDING CODES USING U.L. RATED MATERIALS.
21. ALL CONDUCTORS SHALL BE COPPER, #12 AWG MINIMUM. UNLESS NOTED OTHERWISE, INSULATION SHALL BE 90°C RATED, AND DUAL RATED THHN/THWN-2. NO BX OR ROMEX CABLE IS PERMITTED UNLESS SPECIFICALLY NOTED OTHERWISE ON DRAWINGS.
22. ALL CONDUIT ONLY (C.O.) RUNS SHALL HAVE A PULL WIRE OR ROPE, AND TRUE TAPE.
23. GROUND THE ENTIRE ELECTRICAL SYSTEM IN ACCORDANCE WITH THE NEC AND DRAWINGS. BELOW GRADE GROUND CONDUCTORS SHALL BE #2 AWG SOLID BARE TINTED COPPER. ABOVE GRADE, ALL CONDUCTORS SHALL BE STRANDED GREEN INSULATED COOPER, SEIZED #2 AWG OR AS SHOWN IN THE DRAWINGS. GROUND CONDUCTOR SHALL HAVE A MINIMUM 24" BENDING RADIUS. GROUND RODS SHALL BE COPPER CLAD STEEL, 5/8" ROUND AND 8' LONG. GROUNDING HARDWARE SHALL BE ERICO, STORM COPPER COMPONENTS, FUSHI COPPERWELD OR APPROVED EQUAL.
24. GROUND ALL ANTENNA BASES, ENCLOSURES, FRAMES, CABLE RUNS, AND OTHER METALLIC COMPONENTS USING GROUND WIRES AND CONNECT TO THE BUS BARS. FOLLOW EQUIPMENT MANUFACTURER'S RECOMMENDATIONS FOR GROUNDING. GROUND COAX SHIELD AT BOTH ENDS USING CABLE MANUFACTURER'S RECOMMENDATIONS.
25. THE NUMBER OF GROUNDING BARS MAY VARY DEPENDING UPON THE SITE LAYOUT, ANTENNA LOCATION, AND OTHER FACTORS. THE CONTRACTOR SHALL BE RESPONSIBLE FOR INSTALLING SUFFICIENT GROUNDING BARS AS REQUIRED, PROVIDING 50% SPARE CONNECTION POINTS.
26. EXOTHERMIC WELDS SHALL INCLUDE ALL CABLE TO CABLE, SPLICES, CABLE TO GROUND RODS, GROUND ROD SPLICES AND OTHER SYSTEMS AS INDICATED. ALL MATERIALS USED (MOLDS, WELDING, METAL, ETC.) SHALL BE INSTALLED PER MANUFACTURERS' RECOMMENDATIONS AND PROCEDURES. ALL EXOTHERMIC WELD CONNECTIONS ON GALVANIZED SURFACES SHALL BE CLEANED THOROUGHLY AND COLORED TO MATCH SURFACE WITH (2) TWO COATS OF GALVITE (WHITE) PAINT OR SILVERBRITE (ALUMINUM).
27. ALL STRANDED COPPER WITH GREEN INSULATION TO BE ATTACHED WITH CRIMPED DOUBLE LUG, ATTACHED WITH NUTS, BOLTS AND STAR WASHERS TYPICAL. ALL MECHANICAL CONNECTIONS SHALL HAVE ANTI-OXIDANT GREASE (E.G. NO-OX) APPLIED BETWEEN LUG AND BUS BAR.
28. ALL EXPOSED TINNED COPPER GROUNDS SHALL BE PROTECTED BY 1/2" PVC CONDUIT AND SECURED. WHERE SUBJECT TO MECHANICAL DAMAGE, OTHER GROUND LEADS SHALL ALSO BE ENCLOSED IN 1/2" OR 3/4" LTFC.
29. COMPRESSION FITNESS TO BE USED ON ALL CONDUITS (NO SETSCREWS).
30. PVC CONDUIT INSTALLED IN OUTDOOR LOCATIONS SUBJECT TO SUNLIGHT EXPOSURE SHALL BE UV RESISTANT. SURFACE-MOUNTED CONDUIT INSTALLED IN LOCATIONS SUBJECT TO FOOT TRAFFIC OR OTHER WEAR AND TEAR, SHALL BE PVC SCHEDULE 80, IMC, OR GRC. CONDUIT RUNS ALONG WALLS OR FLOORS SHALL BE SURFACE MOUNTED UNLESS SPECIFICALLY NOTED OTHERWISE ON THE PLANS. OTHER CONDUIT REQUIREMENTS:

30.a. INTERMEDIATE METALLIC CONDUIT (IMC) SHALL HAVE U.L. LABEL. FITTINGS SHALL BE WATERTIGHT COMPRESSION TYPE. IMC SHALL BE USED FOR OUTDOOR RUNS, IMC IN CONTACT WITH EARTH SHALL BE 1/2 LAPPED WRAPPED WITH HUNTS WRAP PROCESS NO. 3

30.b. ELECTRICAL METALLIC TUBING (EMT) SHALL HAVE U.L. LABEL. FITTINGS SHALL BE GLAND RING COMPRESSION TYPE. EMT SHALL BE USED ONLY FOR INTERIOR RUNS.

30.c. FLEXIBLE METALLIC CONDUIT SHALL HAVE U.L. LISTED LABEL AND MAY BE USED WHERE PERMITTED BY CODE. FITTINGS SHALL BE "JAKE" OR "SQUEEZE" TYPE, LENGTH SHALL HAVE FULL SIZE GROUND WIRE.

30.d. ALL UNDERGROUND CONDUIT SHALL BE PVC SCHEDULE 40 (UNLESS NOTED OTHERWISE) AT A MINIMUM DEPTH OF 24" BELOW GRADE.

31. ALL PROPOSED ELECTRICAL ENCLOSURES (EXCEPT FOR JUNCTION OR SPLICE BOXES) SUCH AS PANELBOARDS AND DISCONNECT SWITCHES SHALL BE LABELED WITH PERMANENT ENGRRAVED PHENOLIC NAMEPLATES, BLACK WITH WHITE LETTERING, AND ATTACHED WITH RIVETS.

# ABBREVIATIONS

| | | | | | |
|---|---|---|---|---|---|
| AAV | ALTERNATE ACCESS VENDOR | GR | GROWTH (CABINET) | UADU | UNIVERSAL TYPE A DIGITAL UNIT |
| ACCA | ANTENNA CABLE ASSEMBLY | GRC | GALVANIZED RIGID (STEEL) CONDUIT | U/G | UNDERGROUND |
| AFF | ABOVE FINISHED FLOOR | IGB | INTERNAL GROUND BAR | WP | WEATHERPROOF |
| AFG | ABOVE FINISHED GRADE | IGR | INTERIOR GROUND RING | WW | WIREWAY |
| AWS | ADVANCED WIRELESS SERVICES | IMC | INTERMEDIATE METALLIC CONDUIT | XFMR | TRANSFORMER |
| A/G | ABOVE GROUND | ISCW | INSULATED STRANDED COPPER WIRE | | |
| AGB | ANTENNA GROUND BAR | LTE | LONG TERM EVOLUTION | | |
| ATS | AUTOMATIC TRANSFER SWITCH | LTFC | LIQUID TIGHT FLEXIBLE CONDUIT | | |
| AWG | AMERICAN WIRE GAUGE | MGB | MAIN (OR MASTER) GROUND BAR | | |
| BBU | BASEBAND UNIT | MMBS | MULTI-MODE BASE STATION | | |
| BCW | BARE COPPER WIRE | MTS | MANUAL TRANSFER SWITCH | | |
| BSCW | BARE STRANDED COPPER WIRE | NEC | NATIONAL ELECTRIC CODE | | |
| BTCW | BARE TINNED COPPER WIRE | NID | NETWORK INTERFACE DEVICE | | |
| C | CONDUIT | NV | NETWORK VISION | | |
| CAB | CABINET | O/H | OVERHEAD | | |
| CE | CONCRETE ENCASED | PCS | PERSONAL COMMUNICATION SERVIICES | | |
| CGB | COLLECTOR GROUND BAR | PPC | POWER PROTECTION CABINET | | |
| CKT | CIRCUIT | PRC | PRIMARY RADIO CABINET | | |
| COVP | CAPACITOR OVERVOLTAGE PROTECTION | PVC | POLYVINYL CHLORIDE | | |
| DB | DIRECT BURIED | PWR | POWER | | |
| DEI | DIGITAL EXPANSION INTERFACE | RGS | RIGID GALVANIZED STEEL | | |
| DISC | DISCONNECT | RRH | REMOTE RADIO HEAD | | |
| EMT | ELECTRICAL METALLIC TUBING | RRU | REMOTE RADIO UNIT | | |
| GFCI | GROUND FAULT CURRENT INTERRUPTER | SPD | SURGE PROTECTIVE DEVICE | | |
| G | GROUND | S/S | STAINLESS STEEL | | |
| GND | GROUND | TVSS | TRANSIENT VOLTAGE SURGE SUPPRESSOR | | |
| GPS | GLOBAL POSITIONING SYSTEM | TYP | TYPICAL | | |

# ELECTRICAL LEGEND

## SYMBOLS:

| | |
|---|---|
| — — — | CONDUIT – CONCEALED |
| ——— | CONDUIT – EXPOSED |
| G | CONDUIT AND WIRE. FULL HASH MARK – CIRCUIT WIRE. HALF HASH MARK – BOND WIRE. (G) |
| BTS–2,4 | HOME RUN TO PANEL. E.G. PANEL BTS CIRCUITS 2 & 4. |
| | 20 AMP 125V DUPLEX RECEPTACLE HUBBELL #5362 I |
| | 20 AMP 125V QUADPLEX RECEPTACLE HUBBELL #5362 I |
| GFI | 20 AMP 125V DUPLEX GROUND FAULT INTERRUPT RECEPTACLE HUBBELL #GF5362 I |
| F | FUSED DISCONNECT SWITCH |
| WP | WEATHERPROOF |
| UON | UNLESS OTHERWISE NOTED |
| M 2 | 20 AMP 120/277V SINGLE POLE SWITCH. HUBBELL #HBL 1221 I, +48" M = MOTOR/ HORSEPOWER RATED 2 = 2 POLE |
| 30–2 | CURRENT CARRYING CAPACITY AND NO. OF POLES OF IDENTIFIED DEVICE. EXAMPLE 30 AMP 2 POLES |
| Sab | LIGHTING SWITCH 20 AMP, 120/277V, SINGLE POLE, HUBBELL #HBL 1221, +48" |
| Soff | OVERRIDE OFF LIGHTING SWITCH |

## NOTES:

1. SMOKE DETECTOR TO SHUT DOWN A/C UNITS WHEN ACTIVATED
2. ALL INTERIOR RECEPTACLES AND SWITCHES SHALL BE SURFACE MOUNTED
3. LABEL ALL BOXES AND CIRCUITS AS REQUIRED BY AT&T
4. AC UNITS WILL NOT OPERATE AT THE SAME TIME

ISSUED FOR:

KIRKWOOD PLAZA SHOPPING CENTER
1630 W CAMPBELL AVE.,
CAMPBELL, CA 95008

at&t
5001 EXECUTIVE PARKWAY
SAN RAMON, CALIFORNIA 94583

EPIC WIRELESS GROUP LLC
Connecting a Wireless World

M SQUARED WIRELESS
1387 CALLE AVANZADO
SAN CLEMENTE CA 92673 (949) 391-6824

| | |
|---|---|
| AT&T SITE NO: | CCL01280 |
| PROJECT NO: | 13334607 |
| DRAWN BY: | SD |
| CHECKED BY: | MF |

| REV | DATE | DESCRIPTION | BY |
|---|---|---|---|
| | | | |
| | | | |
| | | | |
| 2 | 12/22/2022 | 100% CD'S REVISED | SP |
| 1 | 12/19/2022 | 100% CD'S FOR SUBMITTAL | BM |
| 0 | 11/30/2022 | 100% CD'S FOR REVIEW | BM |
| C | 02/01/2022 | 95% CD'S REVISED – RLS | BM |
| B | 12/20/2021 | 90% CD'S FOR REV–RLS | DR |
| A | 11/29/2021 | 90% CD'S FOR REVIEW | BM |

LICENSOR:

IT IS A VIOLATION OF LAW FOR ANY PERSON, UNLESS THEY ARE ACTING UNDER THE DIRECTION OF A LICENSED PROFESSIONAL ENGINEER, TO ALTER THIS DOCUMENT.

SHEET TITLE

ELECTRICAL NOTES & LEGEND

SHEET NUMBER

E-1

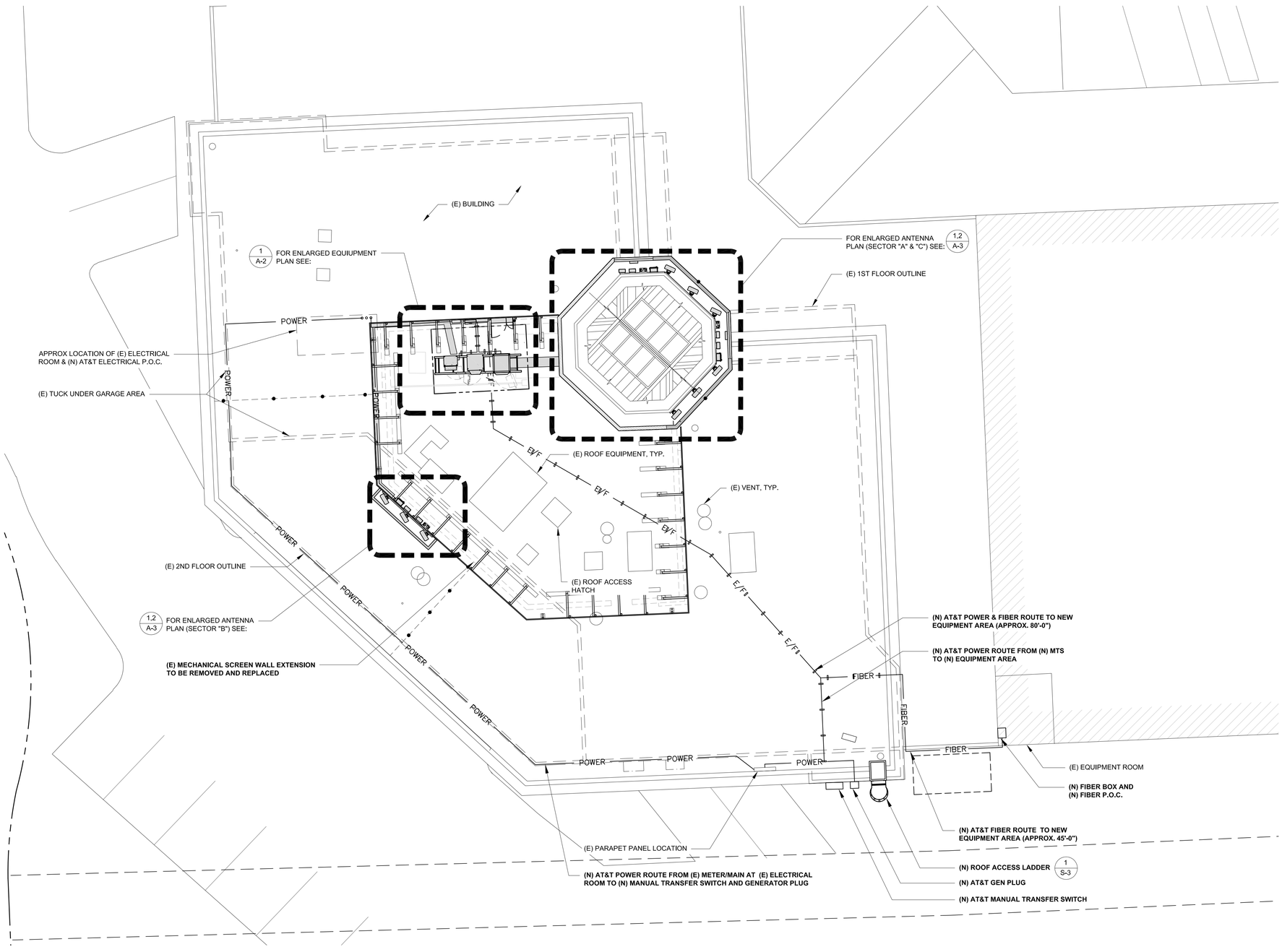


# UTILITY ROUTE PLAN

24"x36" SCALE: 1/8" = 1'-0"
11"x17" SCALE: 1/16" = 1'-0"
8' 6' 4' 2' 0' 8'

1

ISSUED FOR:

KIRKWOOD PLAZA SHOPPING CENTER
1630 W CAMPBELL AVE., CAMPBELL, CA 95008

at&t
5001 EXECUTIVE PARKWAY
SAN RAMON, CALIFORNIA 94583

EPIC WIRELESS GROUP LLC
Connecting a Wireless World

M SQUARED WIRELESS
1387 CALLE AVANZADO
SAN CLEMENTE CA 92673 (949) 391-6824

| | |
|---|---|
| AT&T SITE NO: | CCL01280 |
| PROJECT NO: | 13334607 |
| DRAWN BY: | SD |
| CHECKED BY: | MF |

| REV | DATE | DESCRIPTION | BY |
|---|---|---|---|
| 2 | 12/22/2022 | 100% CD'S REVISED | SP |
| 1 | 12/19/2022 | 100% CD'S FOR SUBMITTAL | BM |
| 0 | 11/30/2022 | 100% CD'S FOR REVIEW | BM |
| C | 02/01/2022 | 95% CD'S REVISED – RLS | BM |
| B | 12/20/2021 | 90% CD'S FOR REV–RLS | DR |
| A | 11/29/2021 | 90% CD'S FOR REVIEW | BM |

LICENSOR:

IT IS A VIOLATION OF LAW FOR ANY PERSON, UNLESS THEY ARE ACTING UNDER THE DIRECTION OF A LICENSED PROFESSIONAL ENGINEER, TO ALTER THIS DOCUMENT.

SHEET TITLE

UTILITY ROUTE PLAN

SHEET NUMBER

E-2

KEY NOTES:

1. REUSE EXISTING NEXTEL FOR AT&T METER/MAIN WALL MOUNTED, 120/240V, 1ø, 3W, 200A, 22KAIC
2. MANUAL TRANSFER SWITCH, 120/240V, 1ø, 3W, 200A, 22KAIC, NEMA 3R
3. (N) 2"C 3 #3/0 +1 #6 GND., CU, THHN/THWN-2 APPROX. 10 FT.
4. (N) GENERATOR PLUG, 120/240V, 1ø, 3W, 200A
5. 3"C-3#350LCMIL, #3 GRD, CU, THHN/THWN-2
6. (E) #4 CU GROUND & ROD
7. NEW 200A, 120/240V, 1ø, 3W, 22KAIC POWER PANEL
8. 2" C-4 #10 + 1 #8 GND, CU, THHN/THWN-2

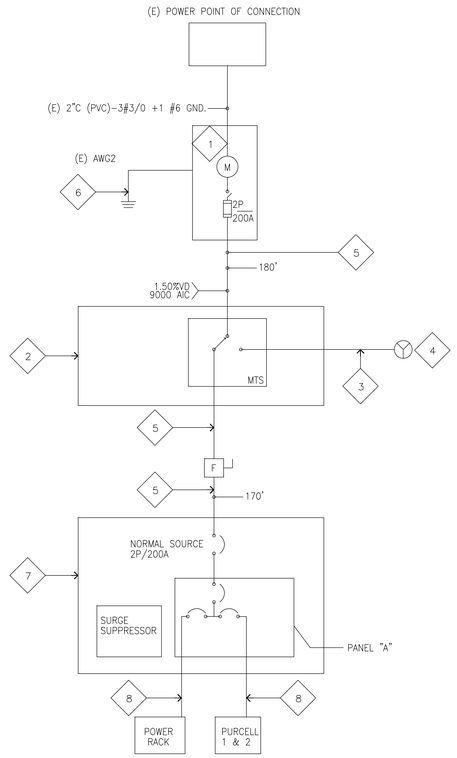


## ELECTRICAL SINGLE LINE DIAGRAM

24"x36" SCALE: NTS
11"x17" SCALE: NTS

4

VOLTS: 120/240 FEED: 200A MAIN: BREAKER LOCATION: INTERIOR
PHASE: 1ø BUSS: 200A RATING: 22,000 AIC NEMA 1
WIRE: 3 MOUNTING: INTERSECT PANEL: A

| LOAD | øA | øB | LTG | REC | BRKR | CKT | | CKT | BRKR | REC | LTG | øA | øB | |
|---|---|---|---|---|---|---|---|---|---|---|---|---|---|---|
| PURCELL #1 | 2250 | | | | 30 | 1 | | 2 | 30 | | | 2250 | | PURCELL #2 |
| FLX16-2520 | | 2250 | | | 2 | 3 | | 4 | 2 | | | | 2250 | FLX16-2520 |
| POWER FAIL | 400 | | | | 20 | 5 | | 6 | 30 | | | 2250 | | POWER RACK-2 |
| MONITOR | | 400 | | | 1 | 7 | | 8 | 2 | | | | 2250 | COMMSCOPE RBA72 BBU |
| RECEPTACLES/TELCO | 400 | | | | 20 1 | 9 | | 10 | 20 1 | | | 400 | | RECEPTACLES |
| NEW POWER RACK-1 | | 2250 | | | 30 | 11 | | 12 | | | | | – | SPACE |
| NETSURE 512 | 2250 | | | | 2 | 13 | | 14 | | | | – | | |
| SPACE | | – | | | | 15 | | 16 | 1 | | | | – | SPACE |
| | – | | | | | 17 | | 18 | 1 | | | – | | SPACE |
| SPACE | | – | | | | 19 | | 20 | 1 | | | | – | SPACE |
| SPACE | – | | | | | 21 | | 22 | 1 | | | – | | SPACE |
| SPACE | | – | | | 1 | 23 | | 24 | 1 | | | | – | SPACE |
| SPACE | – | | | | 1 | 25 | | 26 | 1 | | | – | | SPACE |
| SPACE | | – | | | 1 | 27 | | 28 | 1 | | | | – | SPACE |
| SPACE | – | | | | 1 | 29 | | 30 | 1 | | | – | | SPACE |
| SPACE | | – | | | 1 | 31 | | 32 | 1 | | | | – | SPACE |
| SPACE | – | | | | 1 | 33 | | 34 | 1 | | | – | | SPACE |
| SPACE | | – | | | 1 | 35 | | 36 | 1 | | | | – | SPACE |
| TRANSIENT VOLTAGE | – | | | | 60 | 37 | | 38 | 1 | | | – | | SPACE |
| SURGE PROTECTION TVSS | | – | | | 2 | 39 | | 40 | 1 | | | | – | SPACE |
| VA SUB TOTALS | 5300 | 4900 | | | | | | | | | | 4900 | 4500 | VA SUB TOTALS |

VA/PHASE: PHASE A: 10200 PHASE B: 9400
AMPS/PHASE: PHASE A: 85 PHASE B: 82

CIRCUIT BREAKERS 22,000 A.I.C. TOTAL VA: 19600 / 240V = 90 AMPS

NOTE:
1. MULTIPLE CIRCUITS COMMON NEUTRAL REQUIRE LISTED CIRCUIT BREAKER HANDLE TIES

## PANEL SCHEDULE

24"x36" SCALE: NTS
11"x17" SCALE: NTS

3

## NOT USED

24"x36" SCALE: NTS
11"x17" SCALE: NTS

2

## NOT USED

24"x36" SCALE: NTS
11"x17" SCALE: NTS

1

ISSUED FOR:
KIRKWOOD PLAZA SHOPPING CENTER
1630 W CAMPBELL AVE., CAMPBELL, CA 95008

at&t
5001 EXECUTIVE PARKWAY
SAN RAMON, CALIFORNIA 94583

EPIC WIRELESS GROUP LLC
Connecting a Wireless World

M SQUARED WIRELESS
1387 CALLE AVANZADO
SAN CLEMENTE CA 92673 (949) 391-6824

| | |
|---|---|
| AT&T SITE NO: | CCL01280 |
| PROJECT NO: | 13334607 |
| DRAWN BY: | SD |
| CHECKED BY: | MF |

| REV | DATE | DESCRIPTION | BY |
|---|---|---|---|
| 2 | 12/22/2022 | 100% CD'S REVISED | SP |
| 1 | 12/19/2022 | 100% CD'S FOR SUBMITTAL | BM |
| 0 | 11/30/2022 | 100% CD'S FOR REVIEW | BM |
| C | 02/01/2022 | 95% CD'S REVISED – RLS | BM |
| B | 12/20/2021 | 90% CD'S FOR REV-RLS | DR |
| A | 11/29/2021 | 90% CD'S FOR REVIEW | BM |

LICENSOR:

IT IS A VIOLATION OF LAW FOR ANY PERSON, UNLESS THEY ARE ACTING UNDER THE DIRECTION OF A LICENSED PROFESSIONAL ENGINEER, TO ALTER THIS DOCUMENT.

SHEET TITLE
SINGLE LINE DIAGRAM & PANEL SCHEDULE

SHEET NUMBER
E-3

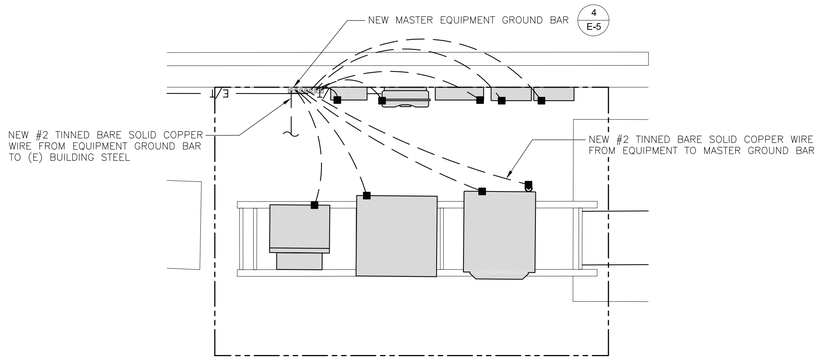


## EQUIPMENT AREA GROUNDING PLAN

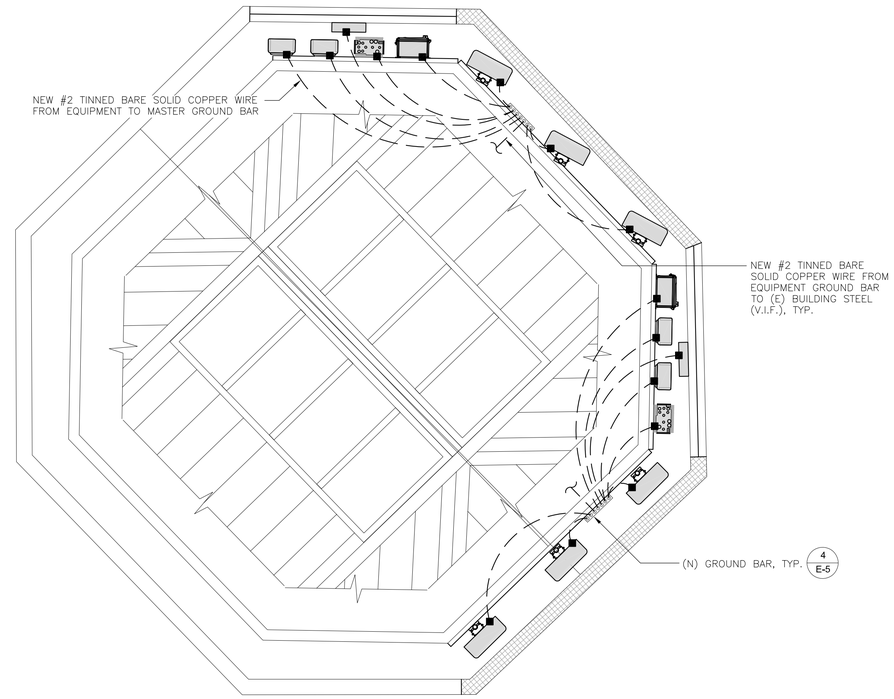


## ANTENNA GROUNDING PLAN @ SECTOR 'A' & 'C'

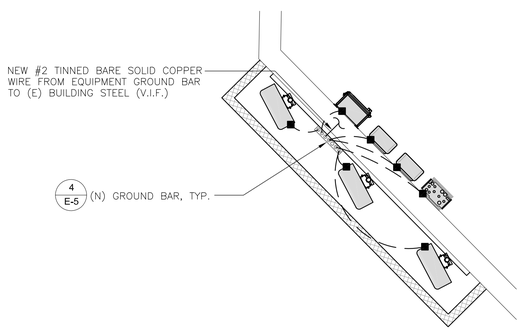


## ANTENNA GROUNDING PLAN @ SECTOR 'B'

**NOTE:**
PAD REBAR AND OTHER CARRIER EQUIPMENT PAD REMOVED FOR CLARITY

**NOTE:**
IF POSSIBLE ENCAPSULATE GROUND IN UTILITY PAD. IF NOT POSSIBLE USE CONDUIT ABOVE PAD.

**NOTE:** MINIMUM 12" RADIUS AT ALL BENDS IN GROUND LEADS AND RINGS

CONTRACTOR SHALL PERFORM GROUND RESISTANCE TEST AT "MGB" AND PERFORM FALL OF POTENTIAL TEST PER IEEE STANDARD NO. 81; SECTION 9.04 ON THE MAIN GROUNDING ELECTRODE TO VERIFY THAT RESISTANCE SHALL NOT EXCEED 5 OHMS AND SHALL SUBMIT AN INDEPENDENT TESTING REPORT INDICATING RESISTANCE VALUES OBTAINED.

## LEGEND:

- GROUND ROD
- MECHANICAL GROUND CONNECTION
- CADWELD
- GROUND ACCESS WELL. CIRCULAR CONCRETE BOX, 9"ø x 12" HIGH WITH CONCRETE COVER – CAST LETTERS "GR ROD" IN COVER. (2 TOTAL)
- GROUND CONDUCTOR

N
W E
S

24"x36" SCALE: 3/8" = 1'-0"
11"x17" SCALE: 3/16" = 1'-0"
0" 1' 2' 4'

# GROUNDING PLAN

1

ISSUED FOR:
KIRKWOOD PLAZA SHOPPING CENTER
1630 W CAMPBELL AVE., CAMPBELL, CA 95008

at&t
5001 EXECUTIVE PARKWAY
SAN RAMON, CALIFORNIA 94583

EPIC WIRELESS GROUP LLC
Connecting a Wireless World

M SQUARED WIRELESS
1387 CALLE AVANZADO
SAN CLEMENTE CA 92673 (949) 391-6824

| | |
|---|---|
| AT&T SITE NO: | CCL01280 |
| PROJECT NO: | 13334607 |
| DRAWN BY: | SD |
| CHECKED BY: | MF |

| REV | DATE | DESCRIPTION | BY |
|---|---|---|---|
| | | | |
| | | | |
| | | | |
| 2 | 12/22/2022 | 100% CD'S REVISED | SP |
| 1 | 12/19/2022 | 100% CD'S FOR SUBMITTAL | BM |
| 0 | 11/30/2022 | 100% CD'S FOR REVIEW | BM |
| C | 02/01/2022 | 95% CD'S REVISED – RLS | BM |
| B | 12/20/2021 | 90% CD'S FOR REV-RLS | DR |
| A | 11/29/2021 | 90% CD'S FOR REVIEW | BM |

LICENSOR:

IT IS A VIOLATION OF LAW FOR ANY PERSON, UNLESS THEY ARE ACTING UNDER THE DIRECTION OF A LICENSED PROFESSIONAL ENGINEER, TO ALTER THIS DOCUMENT.

SHEET TITLE
GROUNDING PLAN

SHEET NUMBER
E-4

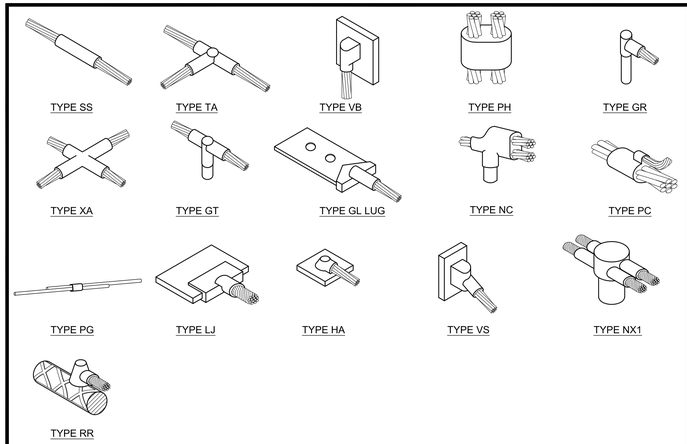


## TYPICAL CADWELD TYPES

24"x36" SCALE: NTS
11"x17" SCALE: NTS

**7**

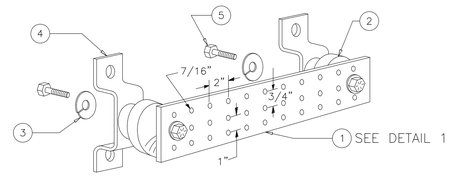


LEGEND:

1. COPPER GROUND BAR, 1/4"X 4"X 20", NEWTON INSTRUMENT CO. CAT. NO. B-6142 OR EQUAL. HOLE CENTERS TO MATCH NEMA DOUBLE LUG CONFIGURATION. (ACTUAL GROUND BAR SIZE WILL VARY BASED ON NUMBER OF GROUND CONNECTIONS)
2. INSULATORS, NEWTON INSTRUMENT CAT. NO. 3061-4 OR EQUAL
3. 5/8" LOCKWASHERS, NEWTON INSTRUMENT CO. CAT. NO. 3015-8 OR EQUAL WALL MOUNTING BRACKET, NEWTON INSTRUMENT CO. CAT NO. A-6056 OR EQUAL
4. 5/8-11 X 1" HHCS BOLTS, NEWTON INSTRUMENT CO. CAT NO. 3012-1 OR EQUAL
5. INSULATORS SHALL BE ELIMINATED WHEN BONDING DIRECTLY TO TOWER/MONOPOLE STRUCTURE. CONNECTION TO TOWER/MONOPOLE STRUCTURE SHALL BE PER MANUFACTURERS RECOMMENDATIONS

## NEW GROUNDING BAR DETAIL

24"x36" SCALE: NTS
11"x17" SCALE: NTS

**4**

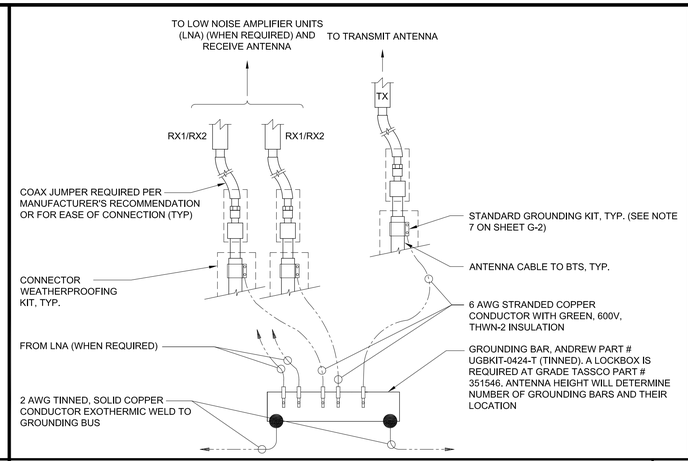


## GROUNDING BAR CONNECTION

24"x36" SCALE: NTS
11"x17" SCALE: NTS

**1**

NOTE:
INSPECTION HAND HOLE MAY BE CONCRETE OR PVC AND SHALL BE A MIN. OF 8" IN WIDTH/DIAMETER.

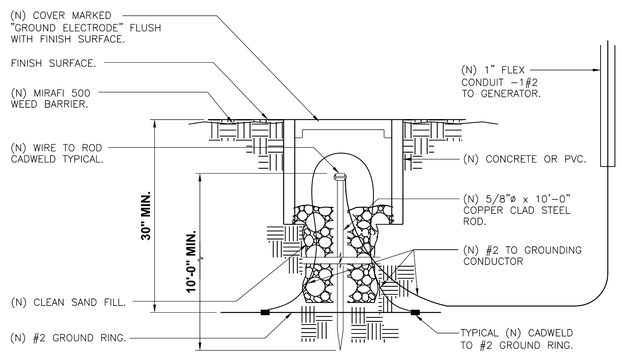


## NEW MAIN GROUND TEST WELL

24"x36" SCALE: NTS
11"x17" SCALE: NTS

**8**

NOTES:

1. DO NOT INSTALL CABLE GROUND KIT AT A BEND AND ALWAYS DIRECT GROUND WIRE DOWN TO GROUND BAR.
2. GROUNDING KIT SHALL BE TYPE AND PART NUMBER AS SUPPLIED OR RECOMMENDED BY CABLE MANUFACTURER

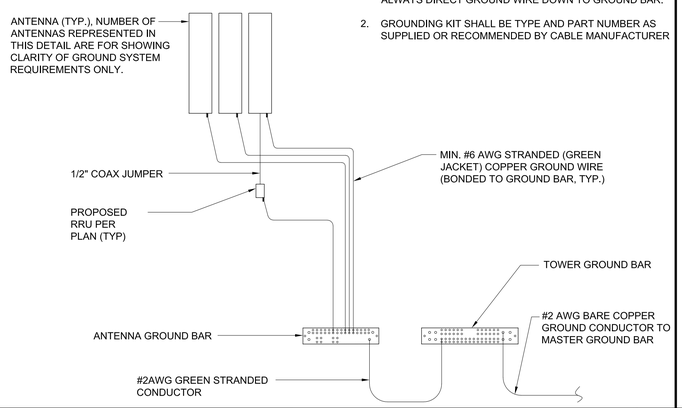


## ANTENNA GROUNDING PLAN

24"x36" SCALE: NTS
11"x17" SCALE: NTS

**5**

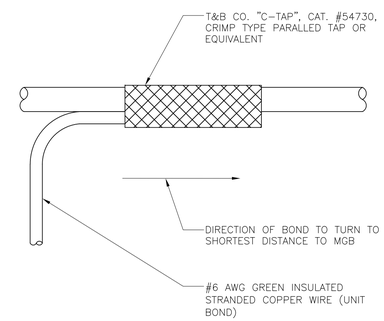


## GROUNDING WIRE CONNECTION

24"x36" SCALE: NTS
11"x17" SCALE: NTS

**2**

## NOT USED

24"x36" SCALE: NTS
11"x17" SCALE: NTS

**9**

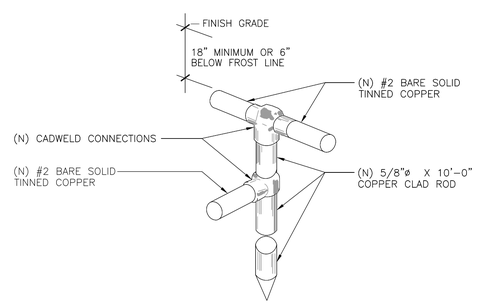


## GROUND RING GROUND ROD

24"x36" SCALE: NTS
11"x17" SCALE: NTS

**6**

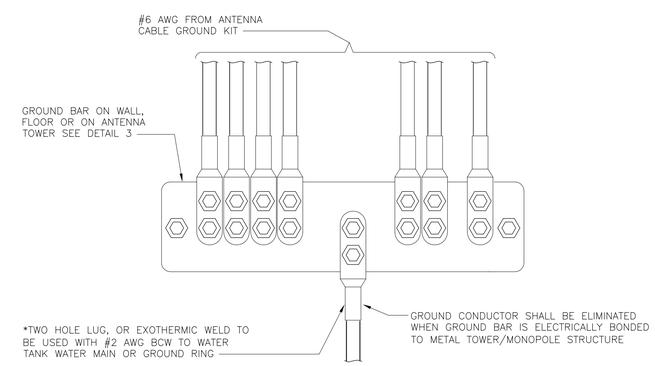


* — GROUND BARS AT THE BOTTOM OF TOWERS/MONOPOLES SHALL ONLY USE EXOTHERMIC WELDS.

## WIRE TO GROUND BAR CONNECTION

24"x36" SCALE: NTS
11"x17" SCALE: NTS

**3**

ISSUED FOR:
KIRKWOOD PLAZA SHOPPING CENTER
1630 W CAMPBELL AVE.,
CAMPBELL, CA 95008

at&t
5001 EXECUTIVE PARKWAY
SAN RAMON, CALIFORNIA 94583

EPIC WIRELESS GROUP LLC
Connecting a Wireless World

M SQUARED WIRELESS
1387 CALLE AVANZADO
SAN CLEMENTE CA 92673 (949) 391-6824

| | |
|---|---|
| AT&T SITE NO: | CCL01280 |
| PROJECT NO: | 13334607 |
| DRAWN BY: | SD |
| CHECKED BY: | MF |

| REV | DATE | DESCRIPTION | BY |
|---|---|---|---|
| | | | |
| | | | |
| | | | |
| 2 | 12/22/2022 | 100% CD'S REVISED | SP |
| 1 | 12/19/2022 | 100% CD'S FOR SUBMITTAL | BM |
| 0 | 11/30/2022 | 100% CD'S FOR REVIEW | BM |
| C | 02/01/2022 | 95% CD'S REVISED - RLS | BM |
| B | 12/20/2021 | 90% CD'S FOR REV-RLS | DR |
| A | 11/29/2021 | 90% CD'S FOR REVIEW | BM |

LICENSOR:

IT IS A VIOLATION OF LAW FOR ANY PERSON, UNLESS THEY ARE ACTING UNDER THE DIRECTION OF A LICENSED PROFESSIONAL ENGINEER, TO ALTER THIS DOCUMENT.

SHEET TITLE
ELECTRICAL & GROUNDING DETAILS

SHEET NUMBER
**E-5**

**SITE ID: CCL01280**
**FA ID: 13334607**
**USID: 266469**
**SITE NAME: Wings Shopping Center**
**ADDRESS: 1630 W Campbell Ave, Campbell, CA 95008**

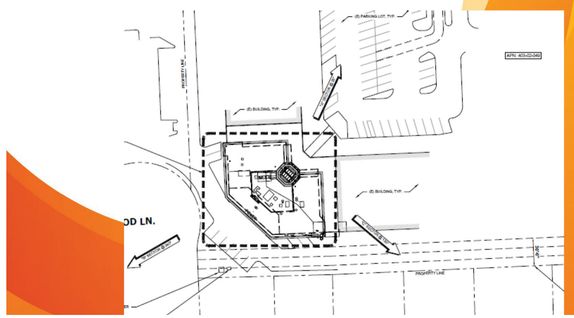


# SCOPE OF WORK

**REV 2**
**DATE: 4/26/2021**
**PREPARED BY: Kathryn Leal 530-313-8784**
**DATE OF WALK SURVEY: 10/21/20 with Carlos Aliva, Bay ETTCS Engineering (650) 872-6028**
**SITE NUMBER: CCL01280**
**SITE NAME: Wings Shopping Center**
**SITE ADDRESS: 1630 W Campbell Ave, Campbell, CA 95008**
**POF COORDINATES: LAT: 37.285075N, LONG: - 121.979801W**
**POF INFORMATION: AT&T Mobility POF to be a proposed fiber box in MPOE behind shopping complex.**
**FIBER ROUTE: From existing Fiber box, AT&T Mobility to route Fiber by coring to the outside of utility room to run along the exterior wall to the roof top, then fiber to be routed through existing conduit through parapet to proposed H-frame.**

**AT&T Mobility POF to be an existing fiber box. AT&T Mobility to core drill through utility room. AT&T Mobility to install 2" conduit with 1 ¼" Innerduct and mule tape from the existing fiber box to proposed gutter box to 6' H-frame, approximately 177' +/- (See Slide 5).**

**AT&T mobility to provide and install Unistrut along the exterior of wall, and to provide and install gutter box along the exterior of wall. All conduit and gutter box shall be painted to match building.**

**AT&T Mobility to provide and install a New 6' wide Utility H-Frame at the site.**

**AT&T Mobility to provide and install (1) Hoffman Box 24"X24"X8" with (1) ¾" Backboard and mini ground bar (Inside Hoffman Box) and mount on new H-Frame.**

**AT&T Wireline to provide and install CIENA CN3931 on new H-Frame and mount above new Hoffman Box. (See Slide 3&4)**

**AT&T Mobility to provide and install a new 2" Rigid conduit from the new H-Frame to the Purcell for Ciena DC Power. Approximately 15' +/-**

**AT&T Mobility to install a new (1) 1 ¼" Innerduct inside the proposed 2" conduit. Approximately 15'+/-.**

**AT&T Mobility to provide and install (1) #6 Ground wire for D2 SIAD. (SIAD install)**

**AT&T Mobility to provide and install (1) -48VDC with 5amp breaker from DC Power Plant using 14AWG Telco Flex Wire. (CIENA DC POWER)**

**AT&T Mobility to provide and install (1) 2" Rigid Conduit from Hoffman Box to DC Power Plant for CIENA DC Power. (See Slide 3)**

**AT&T Mobility to install SIAD inside Purcell Cabinet (with surge equipment) and provide -48VDC with (1) 5amp power feed using #14 AWG Telco Flex wire from DC Power Supply and terminate A&B side of SIAD to DC Power approximately 4ft. (inside Purcell Cabinet)**

**AT&T Mobility to provide and install (1) 2" Rigid Conduit from Hoffman Box to Hybrid rack with (1) Fiber Optic Jumper & Innerduct with SC/LC factory terminated connectors from CIENA 3931 to SIAD inside Purcell Cabinet. SC Connection at CIENA end and LC Connection will be terminated at SIAD end.**



***TELCO/HOFFMAN BOX LAYOUT FOR OUTDOOR APPLICATION ONLY (CIENA 3931 PREP WORK)***

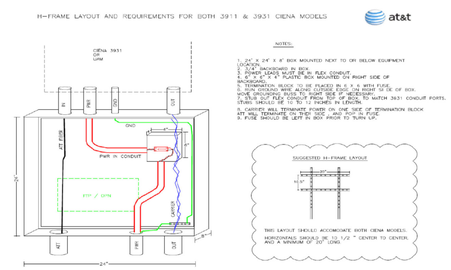




***H-FRAME LAYOUT FOR CIENA CN3931***

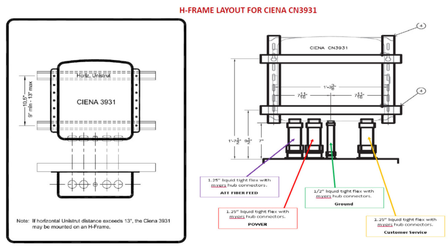


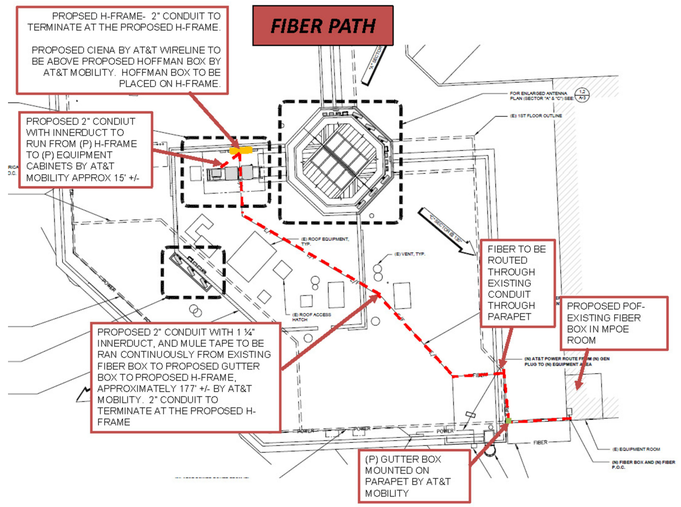




ISSUED FOR:
KIRKWOOD PLAZA SHOPPING CENTER
1630 W CAMPBELL AVE., CAMPBELL, CA 95008

at&t
5001 EXECUTIVE PARKWAY
SAN RAMON, CALIFORNIA 94583

EPIC WIRELESS GROUP LLC
Connecting a Wireless World

M SQUARED WIRELESS
1387 CALLE AVANZADO
SAN CLEMENTE CA 92673 (949) 391-6824

| | |
|---|---|
| AT&T SITE NO: | CCL01280 |
| PROJECT NO: | 13334607 |
| DRAWN BY: | SD |
| CHECKED BY: | MF |

| REV | DATE | DESCRIPTION | BY |
|---|---|---|---|
| 2 | 12/22/2022 | 100% CD'S REVISED | SP |
| 1 | 12/19/2022 | 100% CD'S FOR SUBMITTAL | BM |
| 0 | 11/30/2022 | 100% CD'S FOR REVIEW | BM |
| C | 02/01/2022 | 95% CD'S REVISED – RLS | BM |
| B | 12/20/2021 | 90% CD'S FOR REV–RLS | DR |
| A | 11/29/2021 | 90% CD'S FOR REVIEW | BM |

LICENSOR:

IT IS A VIOLATION OF LAW FOR ANY PERSON, UNLESS THEY ARE ACTING UNDER THE DIRECTION OF A LICENSED PROFESSIONAL ENGINEER, TO ALTER THIS DOCUMENT.

SHEET TITLE
FIBER SCOPE OF WORK

SHEET NUMBER
**E-6**

## AT&T MOBILITY (PROPOSED POF LOCATION)

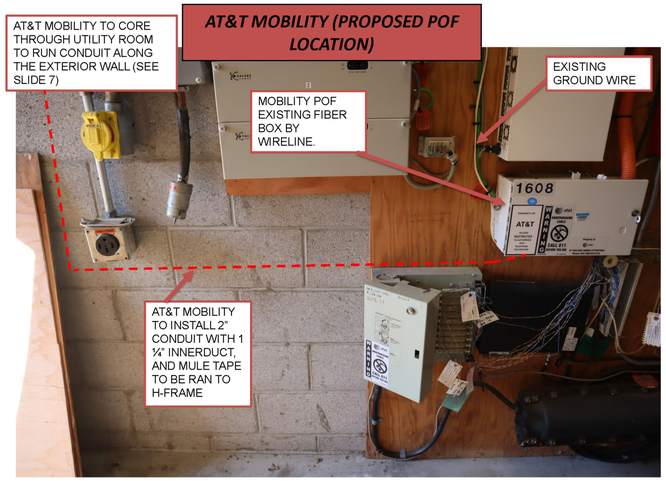


## AT&T WIRELINE (PROPOSED POF LOCATION)

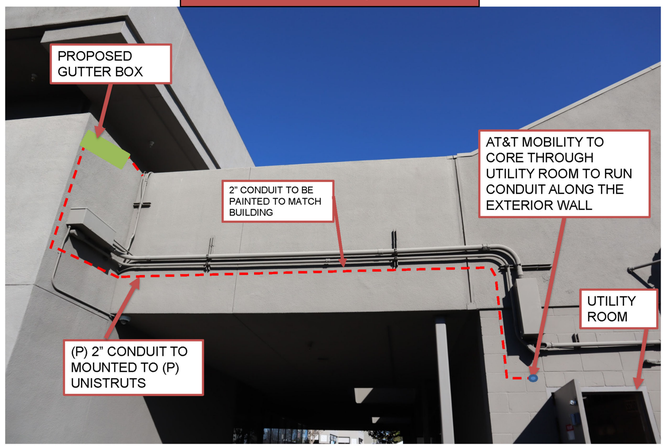


## AT&T WIRELINE (PROPOSED POF LOCATION)

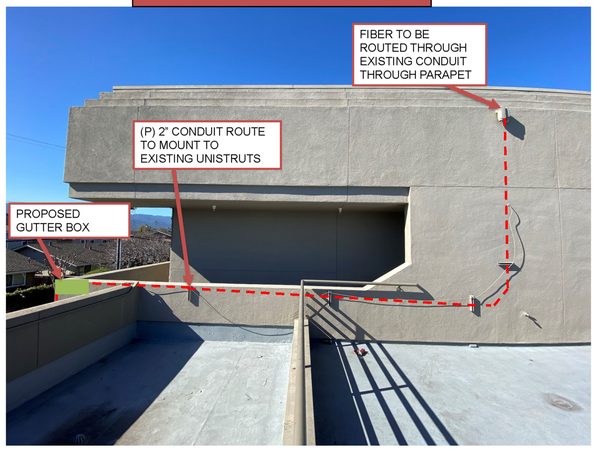


## AT&T WIRELINE (PROPOSED POF LOCATION)

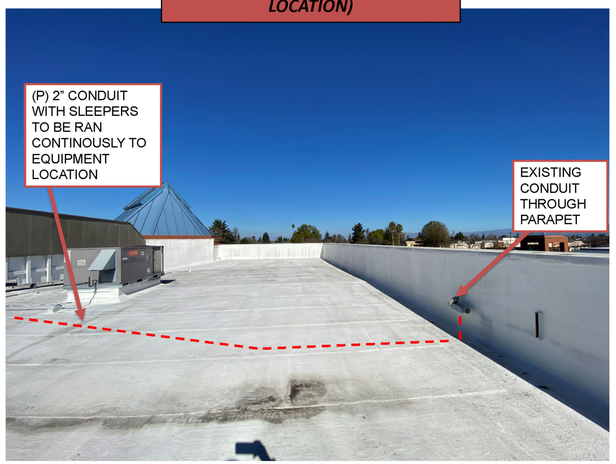


## PROPOSED OUTDOOR EQUIPMENT LAYOUT

(N) ABOVEGROUND ROUTE FROM H-FRAME LOCATION TO PURCELL CABINETS FOR CIENA DC POWER

AT&T MOBILITY TO PROVIDE AND INSTALL (1) D2 SIAD (1) AIR DUCT PLENUM MOUNT IN THE PURCELL CABINET

(N) CIENA CN3931 BY AT&T WIRELINE (#31) MOUNTED TO THE NEW H-FRAME BY AT&T MOBILITY

AT&T MOBILITY WITH (1) DUPLEX SINGLE MODE FIBER OPTIC JUMPER WITH SC/LC FACTORY TERMINATED CONNECTORS (SC CONNECTIONS TERMINATE AT CIENA END / LC CONNECTIONS TERMINATE AT SIAD END IN PURCELL CABINET

**AT&T MOBILITY TO INSTALL D2 SIAD INSIDE PURCELL RACK (WITH EQUIPMENT) AND PROVIDE -48VDC WITH (2) 5AMP POWER FEED USING #14 AWG TELCO FLEX WIRE FROM DC POWER SUPPLY AND TERMINATE A&B SIDE OF SIAD TO DC POWER APPROX 5'+/-**

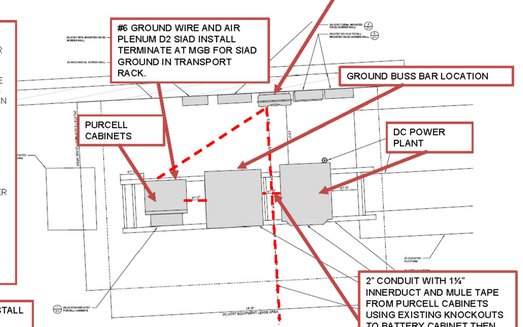


**24"X24"X8" HOFFMAN BOX MOUNTED TO THE NEW H- FRAME BELOW THE CIENA BY AT&T MOBILITY**

ISSUED FOR:
KIRKWOOD PLAZA SHOPPING CENTER
1630 W CAMPBELL AVE., CAMPBELL, CA 95008


at&t
5001 EXECUTIVE PARKWAY
SAN RAMON, CALIFORNIA 94583

EPIC WIRELESS GROUP LLC
Connecting a Wireless World

M SQUARED WIRELESS
1387 CALLE AVANZADO
SAN CLEMENTE CA 92673 (949) 391-6824


| | |
|---|---|
| AT&T SITE NO: | CCL01280 |
| PROJECT NO: | 13334607 |
| DRAWN BY: | SD |
| CHECKED BY: | MF |

| REV | DATE | DESCRIPTION | BY |
|---|---|---|---|
| 2 | 12/22/2022 | 100% CD'S REVISED | SP |
| 1 | 12/19/2022 | 100% CD'S FOR SUBMITTAL | BM |
| 0 | 11/30/2022 | 100% CD'S FOR REVIEW | BM |
| C | 02/01/2022 | 95% CD'S REVISED – RLS | BM |
| B | 12/20/2021 | 90% CD'S FOR REV–RLS | DR |
| A | 11/29/2021 | 90% CD'S FOR REVIEW | BM |

LICENSOR:


IT IS A VIOLATION OF LAW FOR ANY PERSON, UNLESS THEY ARE ACTING UNDER THE DIRECTION OF A LICENSED PROFESSIONAL ENGINEER, TO ALTER THIS DOCUMENT.


SHEET TITLE
FIBER SCOPE OF WORK

SHEET NUMBER
**E-7**

# GENERAL NOTES

1. CONTRACTOR SHALL FIELD VERIFY SITE OR LAYOUT RESTRICTIONS, SITE CONDITIONS, DIMENSIONS, AND ELEVATIONS BEFORE START OF CONSTRUCTION. ANY DISCREPANCIES SHALL BE BROUGHT TO THE ATTENTION OF VECTOR STRUCTURAL ENGINEERING, LLC PRIOR TO BEGINNING PROJECT. ALL WORK SHALL BE PERFORMED USING ACCEPTED CONSTRUCTION PRACTICES.
2. NO FIELD MODIFICATIONS MAY BE MADE WITHOUT EXPRESS WRITTEN CONSENT FROM THE ENGINEER OF RECORD. ENGINEER OF RECORD ASSUMES NO RESPONSIBILITY FOR THE STRUCTURE IF ALTERATIONS AND/OR ADDITIONS ARE MADE TO THE DESIGN AS SHOWN IN THESE DRAWINGS.
3. THE CONTRACTOR AND ALL SUBCONTRACTORS SHALL COMPLY WITH ALL LOCAL CODES, REGULATIONS, AND ORDINANCES AS WELL AS STATE DEPARTMENT OF INDUSTRIAL REGULATIONS AND DIVISION OF INDUSTRIAL SAFETY (OSHA) REQUIREMENTS.
4. THE CONTRACTOR SHALL SUPERVISE AND DIRECT ALL WORK TO THE BEST OF HIS/HER ABILITY AND SKILL. CONTRACTOR SHALL BE SOLELY RESPONSIBLE FOR ALL CONSTRUCTION MEANS, METHODS, TECHNIQUES, PROCEDURES, AND SEQUENCES, AND FOR COORDINATING ALL PORTIONS OF THE WORK UNDER THE CONTRACT.
5. THE CONTRACTOR SHALL VERIFY, COORDINATE, AND PROVIDE ALL NECESSARY BLOCKING, BACKING, FRAMING, HANGERS, OR OTHER SUPPORTS FOR ALL ITEMS REQUIRING SAME, WHETHER SHOWN OR NOT. THE CONTRACTOR SHALL BE RESPONSIBLE FOR ALL TEMPORARY BRACING, SHORING, FORMWORK, ETC., AND SHALL CONFORM TO ALL NATIONAL, STATE, AND LOCAL ORDINANCES AND CODES, IN ORDER TO SAFELY EXECUTE ALL STAGES OF WORK TO COMPLETE THIS PROJECT.
6. IT IS THE INTENT OF THESE DRAWINGS TO SHOW THE COMPLETED INSTALLATION OF THE STRUCTURE SHOWN.
7. CONTRACTOR ASSUMES RESPONSIBILITY FOR JOB SITE CONDITIONS DURING THE COURSE OF CONSTRUCTION OF THE PROJECT, INCLUDING THE SAFETY OF ALL PERSONS AND PROPERTY IN ACCORDANCE WITH GENERALLY ACCEPTED CONSTRUCTION PRACTICES. THIS REQUIREMENT APPLIES CONTINUOUSLY, AND IS NOT LIMITED TO NORMAL WORKING HOURS.
8. CONTRACTOR TO HOLD ENGINEER HARMLESS FROM ANY AND ALL LIABILITY, REAL OR ALLEGED, IN CONNECTION WITH THE PERFORMANCE OF WORK ON THIS PROJECT.
9. IT IS THE RESPONSIBILITY OF THE CONTRACTOR TO LOCATE ALL EXISTING UTILITIES, SHOWN OR NOT SHOWN. THE CONTRACTOR IS FINANCIALLY RESPONSIBLE FOR REPAIR OR REPLACEMENT OF UTILITIES OR OTHER PROPERTY DAMAGED IN CONJUNCTION WITH THE EXECUTION OF WORK ON THIS PROJECT.
10. WEATHER PROOFING AND/OR FLASHING TO BE PROVIDED BY CONTRACTOR AS REQUIRED.
11. CONTRACTOR AGREES TO ASSUME SOLE AND COMPLETE RESPONSIBILITY FOR JOB SITE CONDITIONS DURING THE COURSE OF CONSTRUCTION OF THIS PROJECT INCLUDING SAFETY OF ALL PERSONS AND PROPERTY; THAT THIS REQUIREMENT SHALL APPLY CONTINUOUSLY AND NOT BE LIMITED TO NORMAL WORKING HOURS; AND THAT THE CONTRACTOR SHALL DEFEND, INDEMNIFY AND HOLD THE ARCHITECT/ ENGINEER HARMLESS FROM ANY AND ALL LIABILITY, REAL OR ALLEGED.
12. THESE CONTRACT DRAWINGS AND SPECIFICATIONS REPRESENT THE FINISHED STRUCTURE. THEY DO NOT INDICATE THE METHOD OF CONSTRUCTION. THE CONTRACTOR SHALL PROVIDE ALL MEASURES NECESSARY TO PROTECT THE STRUCTURE, WORKERS, AND PEDESTRIANS DURING CONSTRUCTION. SUCH MEASURES SHALL INCLUDE, BUT NOT BE LIMITED TO BRACING, SHORING FOR LOADS DUE TO CONSTRUCTION EQUIPMENT, TEMPORARY STRUCTURES, AND PARTIALLY COMPLETED WORK, ETC. OBSERVATION VISITS TO THE SITE BY THE ARCHITECT/ ENGINEER SHALL NOT INCLUDE INSPECTION OF SUCH ITEMS.
13. ALL STRUCTURAL MEMBERS, HARDWARE, & FASTENERS TO BE STEEL, U.N.O.
14. ALL ASPECTS OF THE EXISTING STRUCTURE ARE TO REMAIN UNDISTURBED U.N.O. CONTRACTOR TO VERIFY ALL ASPECTS AND DIMENSIONS OF THE EXISTING STRUCTURE FOR CONFORMITY WITH THE VALUES SHOWN IN THESE PLANS. CONTRACTOR TO NOTIFY VECTOR OF ANY DISCREPANCIES BETWEEN THE VALUES SHOWN ON THESE PLANS AND THE EXISTING STRUCTURE.
15. ALL ASPECTS OF THE EXISTING STRUCTURE ARE ASSUMED TO BE IN GOOD CONDITION, FREE FROM DAMAGE OR DETERIORATION. CONTRACTOR TO VERIFY CONDITION OF STRUCTURE AND INFORM VECTOR OF ANY DAMAGED STRUCTURAL MEMBERS.
16. ALL STRUCTURAL COMPONENTS TO BE CONNECTED TOGETHER SHALL BE COMPLETELY FIT UP ON THE GROUND OR OTHERWISE VERIFIED FOR COMPATIBILITY PRIOR TO LIFTING ANY COMPONENT INTO PLACE. REPAIRS REQUIRED DUE TO FIT-UP OR CONNECTION COMPATIBILITY PROBLEMS AFTER PARTIAL ERECTION ARE THE FINANCIAL RESPONSIBILITY OF THE CONTRACTOR.

# DESIGN CRITERIA

1. STRUCTURAL DESIGN IS BASED ON THE CALIFORNIA BUILDING CODE, 2022 EDITION (2021 IBC) AND THE ASCE 7-16 STANDARD
2. DESIGN LOADS:

WIND: WIND SPEED = 91 MPH (3-SEC GUST) PER THE ASCE 7-16 STANDARD
RISK CATEGORY: II
EXPOSURE: B
ICE: NONE PER THE ASCE 7-16 STANDARD
SEISMIC:
IMPORTANCE FACTOR: 1.00
RISK CATEGORY: II
MAPPED SPECTRAL RESPONSE ACCELERATIONS:
$S_S$ = 2.025g, $S_1$ = 0.723g
SITE CLASS: D
SPECTRAL RESPONSE COEFFICIENTS:
$S_{DS}$ = 1.620g, $S_{D1}$ = 0.819g
SEISMIC DESIGN CATEGORY: D
ANALYSIS PROCEDURE: EQUIVALENT LATERAL FORCE

# STRUCTURAL STEEL

1. ALL STEEL WORK SHALL BE IN ACCORDANCE WITH THE LATEST EDITION OF THE AISC MANUAL OF STEEL CONSTRUCTION. STEEL SECTIONS SHALL BE IN ACCORDANCE WITH ASTM AS INDICATED BELOW:

| | |
|---|---|
| WIDE FLANGE: | ASTM A992 GR. 50 |
| RECT/SQ. HSS: | ASTM A500 GR B (46 ksi) |
| PIPE: | ASTM A53 GR. B |
| ANGLES, CHANNELS, PLATES: | ASTM A36 |
| STEEL TO STEEL BOLTS | ASTM F3125 GR. A325N |
| FRP TO STEEL BOLTS: | ASTM A307 |
| BOLTS FOR GRATING CLIPS: | ASTM A307 |
| SCREWS: | SAE GR. 5 (OR EQUIVALENT) |
| HEAVY HEX NUTS: | ASTM A563 GR. C OR DH OR EQUIVALENT |
| HARDENED WASHERS: | ASTM F436 OR EQUIVALENT |

2. ALL STEEL SHALL BE HOT-DIPPED GALVANIZED IN ACCORDANCE WITH ASTM A123 AND ASTM F2329. FIELD MODIFICATIONS ARE TO BE COATED WITH ZINC ENRICHED PAINT.
3. ALL WELDING TO BE PERFORMED USING E70XX ELECTRODES AND SHALL CONFORM TO AISC. WHERE FILLET WELDS SIZES ARE NOT SHOWN, PROVIDE THE MINIMUM SIZE PER TABLE J2.4 IN THE AISC MANUAL OF STEEL CONSTRUCTION. PAINTED SURFACES SHALL BE TOUCHED UP. ALL WELDING SHALL BE PERFORMED IN AN APPROVED SHOP BY WELDERS CERTIFIED IN ACCORDANCE WITH AWS D1.1.
4. ALL STRUCTURAL BOLTS SHALL BE TIGHTENED TO 'SNUG-TIGHT' CONDITION AS DEFINED BY AISC.
5. ALL BOLT HOLES SHALL BE STANDARD (1/16" OVERSIZED), U.N.O. WASHERS ARE REQUIRED FOR ANY CONNECTION THAT HAS LARGER THAN STANDARD SIZED BOLT HOLES.

# POST-INSTALLED ANCHORS

1. USE, INSTALLATION, EMBEDMENT DEPTH, AND DIAMETER OF EXPANSION/WEDGE OR ADHESIVE ANCHORS IN HARDENED CONCRETE OR CMU SHALL CONFORM TO ICC REPORT & MANUFACTURER'S RECOMMENDATIONS.
2. MAINTAIN CRITICAL EDGE DISTANCE SPECIFIED IN ICC REPORT AS A MINIMUM, U.N.O. IN THESE DRAWINGS
3. LOCATE AND AVOID CUTTING EXISTING REBAR OR TENDONS WHEN DRILLING HOLES IN ELEVATED CONCRETE SLABS, CONCRETE WALLS, OR CMU.

# STRUCTURAL WOOD MEMBERS

1. FRAMING LUMBER:
   DOUGLAS FIR LARCH NO. 2 GRADE IDENTIFIED BY THE GRADING OR INSPECTION AGENCY THAT HAS BEEN APPROVED BY AN ACCREDITATION BODY THAT COMPLIES WITH DOC PS 20. GRADING PRACTICES AND IDENTIFICATION SHALL COMPLY WITH RULES PUBLISHED BY AN AGENCY APPROVED IN ACCORDANCE WITH THE PROCEDURES OF DOC PS 20
2. BOLT HOLES SHALL BE 1/16" MAXIMUM LARGER THAN THE BOLT SIZE. RE-TIGHTEN ALL NUTS PRIOR TO CLOSING IN.
3. ALL SILLS OR PLATES RESTING ON CONCRETE OR MASONRY SHALL BE PRESSURE TREATED DOUGLAS FIR. BOLTS SHALL BE PLACED 9 INCHES FROM THE END OF A PLATE, OR FROM A NOTCH GREATER THAN ½ THE WIDTH OF THE PLATE, AND SPACED AT INTERVALS NOTED.
4. DO NOT NOTCH JOISTS, RAFTERS OR BEAMS EXCEPT WHERE SHOWN IN DETAILS. OBTAIN ENGINEER'S APPROVAL FOR ANY HOLES OR NOTCHES NOT DETAILED.
5. CONNECTION HARDWARE SHALL BE BY SIMPSON STRONG-TIE, OR ICC APPROVED EQUAL. ALL HARDWARE TO BE INSTALLED PER MANUFACTURER'S WRITTEN INSTRUCTIONS.
6. FASTENING SCHEDULE PER 2016 EDITION OF THE CALIFORNIA BUILDING CODE, TABLE NO. 2304.9.1. UNLESS NOTED OTHERWISE.
7. ALL NAILS, BOLTS, HOLDOWNS, STRAPS OR OTHER STEEL FASTENERS IN CONTACT WITH PRESSURE TREATED TIMBER SHALL BE HOT-DIPPED GALVANIZED, STAINLESS STEEL OR OTHERWISE TREATED OR ISOLATED TO PREVENT CHEMICAL ATTACK. CONTRACTOR SHALL VERIFY TREATMENT METHOD AND CONFIRM APPROPRIATE CORROSION RESISTANCE BE PROVIDED IN ACCORDANCE WITH HARDWARE SUPPLIER RECOMMENDATIONS.

# SPECIAL INSPECTION

1. CONTRACTOR SHALL PROVIDE REQUIRED SPECIAL INSPECTIONS PERFORMED BY AN INDEPENDENT INSPECTOR, APPROVED BY CARRIER AND THE GOVERNING JURISDICTION, AS REQUIRED BY CHAPTER 17 OF THE INTERNATIONAL BUILDING CODE FOR THE FOLLOWING:
   A. SPECIAL INSPECTION OF HIGH-STRENGTH BOLTING (WHEN APPLICABLE):
      - PERIODIC SPECIAL INSPECTION IF BOLTS ARE PRETENSIONED WITH MATCH-MARKING TECHNIQUES
      - CONTINUOUS SPECIAL INSPECTION OF ALL OTHER HIGH-STRENGTH BOLTING
   B. PERIODIC FOR POST-INSTALLED ANCHORS IN HARDENED CONCRETE
   C. PERIODIC/CONTINUOUS FOR FIELD WELDING (IF UTILIZED)
2. PROVIDE SPECIAL INSPECTIONS FOR OTHER ITEMS NOTED ON DRAWINGS TO CONFIRM COMPLIANCE WITH CONTRACT DOCUMENTS.
3. STEEL FABRICATION SHALL BE DONE ON THE PREMISES OF A FABRICATOR REGISTERED AND APPROVED TO PERFORM SUCH WORK WITHOUT SPECIAL INSPECTION.
4. SPECIAL INSPECTION IS NOT REQUIRED FOR WORK OF A MINOR NATURE OR AS WARRANTED BY CONDITIONS IN THE JURISDICTION AS APPROVED BY THE BUILDING OFFICIAL. THUS, SPECIAL INSPECTION ITEMS ABOVE MAY BE WAIVED AS DEEMED APPROPRIATE BY THE BUILDING OFFICIAL.
5. THE SPECIAL INSPECTOR SHALL PROVIDE A COPY OF THE REPORT TO THE OWNER, ARCHITECT, STRUCTURAL ENGINEER, CONTRACTOR, AND BUILDING OFFICIAL.
6. STRUCTURAL OBSERVATION NOT REQUIRED.

## DRAWING INDEX


| | |
|---|---|
| SN-1 | STRUCTURAL NOTES |
| S-1 | STRUCTURAL ROOF PLAN |
| S-2 | SCREEN WALL DETAILS |
| S-3 | LADDER DETAILS |


# ABBREVIATIONS

| | |
|---|---|
| A.B. | ANCHOR BOLT |
| AGL | ABOVE GRADE LEVEL |
| ARCH'L | ARCHITECTURAL DRAWINGS |
| B.C. | BOLT CIRCLE |
| BLDG | BUILDING |
| BLK | BLOCK |
| BLK'G | BLOCKING |
| BM | BEAM |
| CANT'L | CANTILEVERED |
| C.L. | CENTER LINE |
| CMU | CONCRETE MASONRY UNIT |
| COL | COLUMN |
| CONC. | CONCRETE |
| CONN. | CONNECTION |
| CONT | CONTINUOUS |
| DBL | DOUBLE |
| ø | DIAMETER |
| DETAIL | DETAIL |
| (E) | EXISTING |
| EA. | EACH |
| EL | ELEVATION |
| EOR | ENGINEER OF RECORD |
| FND | FOUNDATION |
| FTG | FOOTING |
| GL | GLUE LAMINATED (BEAM) |
| HDR | HEADER |
| HORIZ. | HORIZONTAL |
| H.D. | HOLD DOWN |
| I.D. | INNER DIAMETER |
| MFR | MANUFACTURER/MANUFACTURED |
| (N) | NEW |
| N.T.S. | NOT TO SCALE |
| o/ | OVER |
| O.C. | ON CENTER |
| O.D. | OUTER DIAMETER |
| OPT'L | OPTIONAL |
| O.S.B. | ORIENTED STRAND BOARD |
| (P) | PROPOSED |
| PL | PLATE |
| REQ'D | REQUIRED |
| SHTH'G | SHEATHING |
| SHT | SHEET |
| SIM. | SIMILAR |
| STL | STEEL |
| THK | THICK |
| t/ | TOP OF |
| T.O.F. | TOP OF FOOTING |
| T.O.W. | TOP OF WALL |
| T&B | TOP AND BOTTOM |
| TYP. | TYPICAL |
| U.N.O. | UNLESS NOTED OTHERWISE |
| VERT. | VERTICAL |
| w/ | WITH |
| u/ | UNDER |


VECTOR ENGINEERS
651 W. GALENA PARK BLVD., SUITE 101
DRAPER, UT 84020
P: (801) 990-1775 F: (801) 990-1776
www.vectorse.com


M SQUARED WIRELESS
1387 CALLE AVANZADO
SAN CLEMENTE CA 92673 (949) 361-6824

at&t

STRUCTURAL NOTES

CCL01280 KIRKWOOD PLAZA
---
1630 WEST CAMPBELL AVENUE
CAMPBELL, CA 95008

REGISTERED PROFESSIONAL ENGINEER
WELLS HOLMES
88203
STRUCTURAL
STATE OF CALIFORNIA
12/22/2022

| DATE: 12/09/2022 | DESIGNED: JRH | DRAFTER: JRH |
|---|---|---|

REVISIONS

| REV | DATE | DESCRIPTION |
|---|---|---|
| | | |
| | | |
| | | |
| | | |
| | | |

U1703.555.221

SN-1 REV 0


Copyright © 2022 Vector Structural Engineering, LLC, *This drawing contains proprietary information belonging to Vector Structural Engineering, LLC, and may be neither wholly nor partially copied or reproduced without the prior written permission of Vector Structural Engineering, LLC.*

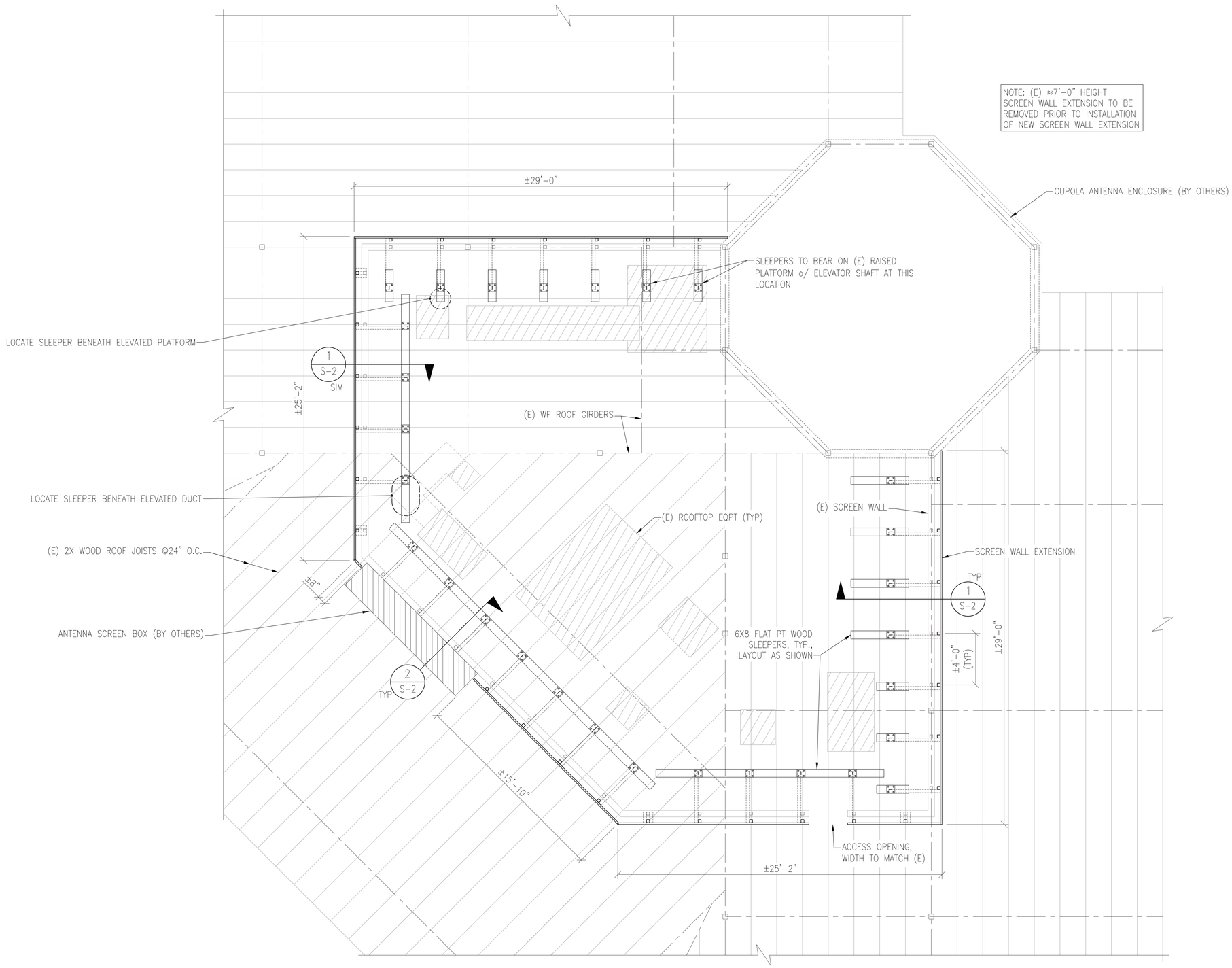


STRUCTURAL ROOF PLAN
N.T.S.
1

VECTOR ENGINEERS
651 W. GALENA PARK BLVD., SUITE 101
DRAPER, UT 84020
P: (801) 990-1775 F: (801) 990-1776
www.vectorse.com

M SQUARED WIRELESS
1387 CALLE AVANZADO
SAN CLEMENTE CA 92673 (949) 361-6824

at&t

# STRUCTURAL ROOF PLAN

CCL01280 KIRKWOOD PLAZA

---

1630 WEST CAMPBELL AVENUE
CAMPBELL, CA 95008

REGISTERED PROFESSIONAL ENGINEER
WELLS HOLMES
S 8203
STRUCTURAL
STATE OF CALIFORNIA
12/22/2022

| DATE: 12/09/2022 | DESIGNED: JRH | DRAFTER: JRH |
|---|---|---|

REVISIONS

| REV | DATE | DESCRIPTION |
|---|---|---|
| | | |
| | | |
| | | |
| | | |
| | | |

U1703.555.221

S-1 REV 0

Copyright © 2022 Vector Structural Engineering, LLC, *This drawing contains proprietary information belonging to Vector Structural Engineering, LLC, and may be neither wholly nor partially copied or reproduced without the prior written permission of Vector Structural Engineering, LLC.*

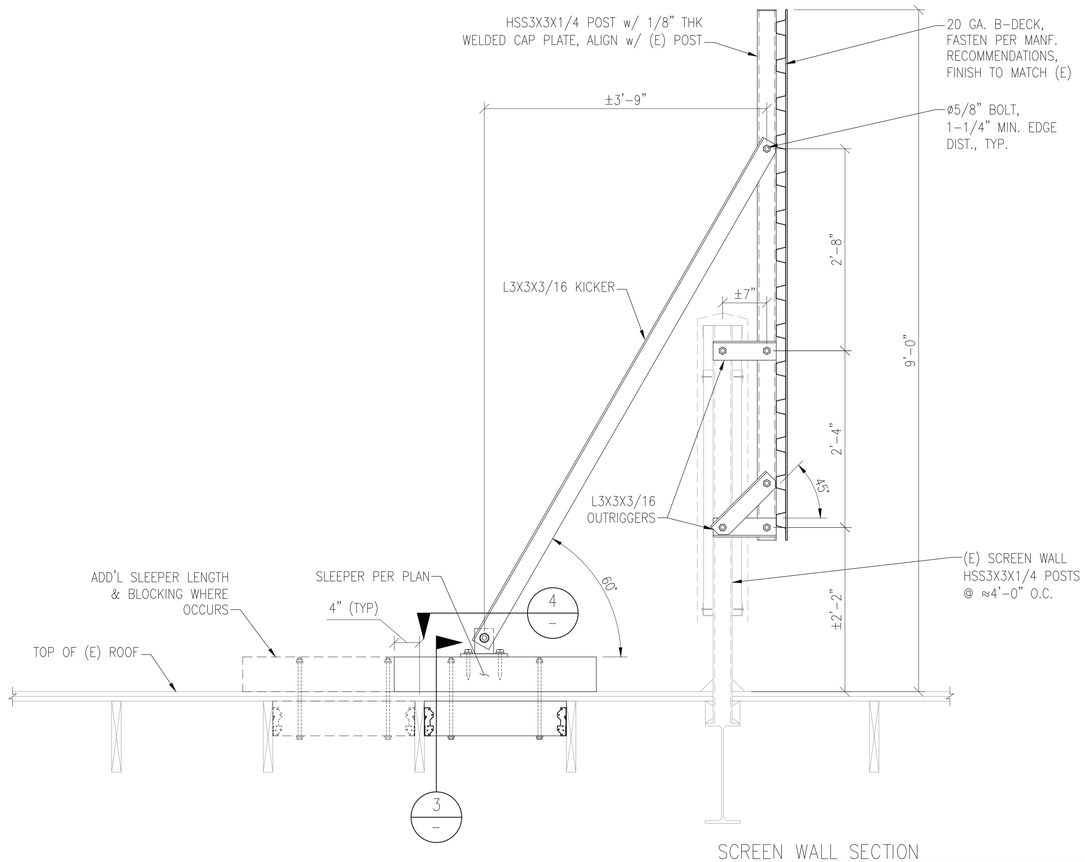


SCREEN WALL SECTION (1)

N.T.S.

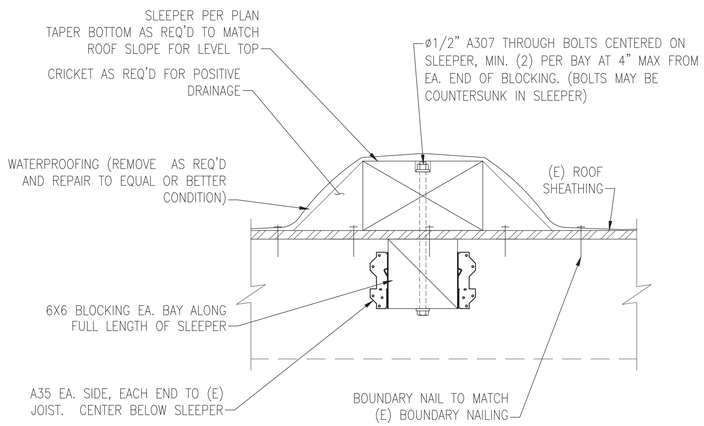


SLEEPER & BLOCKING DETAIL (3)

N.T.S.

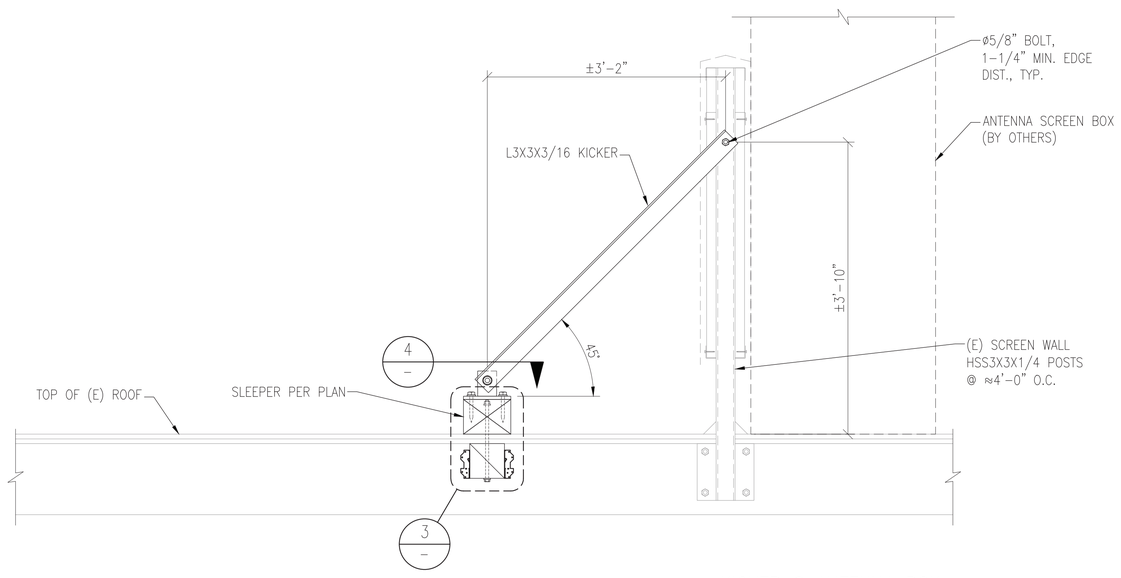


KICKER @ ANTENNA BOX (2)

N.T.S.

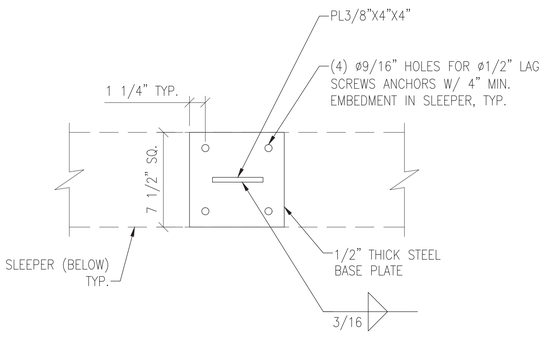


KICKER BASE PLATE (4)

N.T.S.

VECTOR ENGINEERS
651 W. GALENA PARK BLVD., SUITE 101
DRAPER, UT 84020
P: (801) 990-1775 F: (801) 990-1776
www.vectorse.com

M SQUARED WIRELESS
1387 CALLE AVANZADO
SAN CLEMENTE CA 92673 (949) 361-6824

at&t

SCREEN WALL DETAILS

CCL01280 KIRKWOOD PLAZA

---

1630 WEST CAMPBELL AVENUE
CAMPBELL, CA 95008

REGISTERED PROFESSIONAL ENGINEER
WELLS HOLMES
S-8203
STRUCTURAL
STATE OF CALIFORNIA
12/22/2022

| DATE: 12/09/2022 | DESIGNED: JRH | DRAFTER: JRH |
|---|---|---|

REVISIONS

| REV | DATE | DESCRIPTION |
|---|---|---|
| | | |
| | | |
| | | |
| | | |
| | | |

U1703.555.221

S-2

REV 0

Copyright © 2022 Vector Structural Engineering, LLC, *This drawing contains proprietary information belonging to Vector Structural Engineering, LLC, and may be neither wholly nor partially copied or reproduced without the prior written permission of Vector Structural Engineering, LLC.*

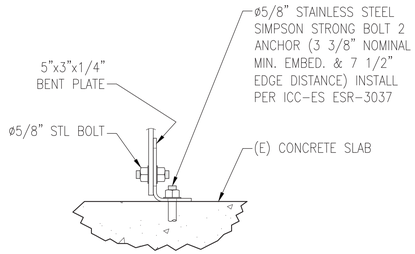


ELEVATION VIEW

LADDER BASE ANCHORAGE (3)

N.T.S.

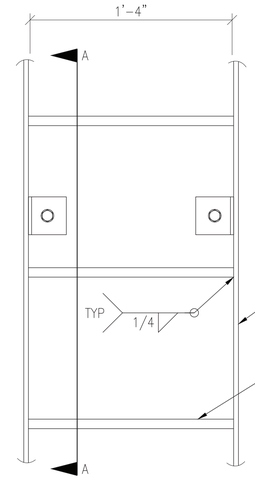


NOTE: CONNECT LADDER TO BLDG WALL @ MAX. 4'-0" O.C., NEAR THE TOP OF THE LADDER PER DTL 2/-, AND BEAR ON FOOTING BELOW PER DTL 3/-

ELEVATION VIEW

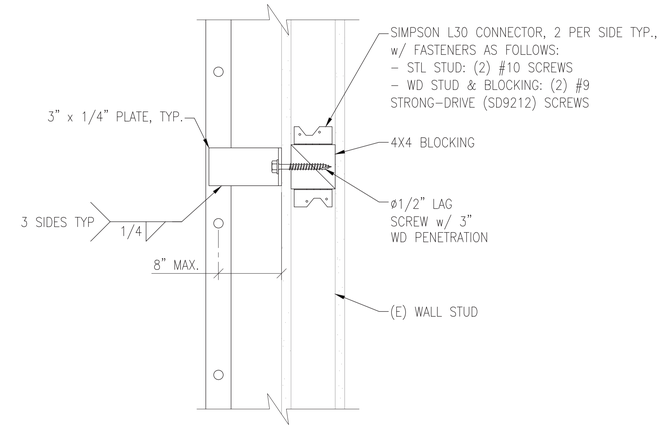


SECTION A-A

LADDER DETAIL (1)

N.T.S.

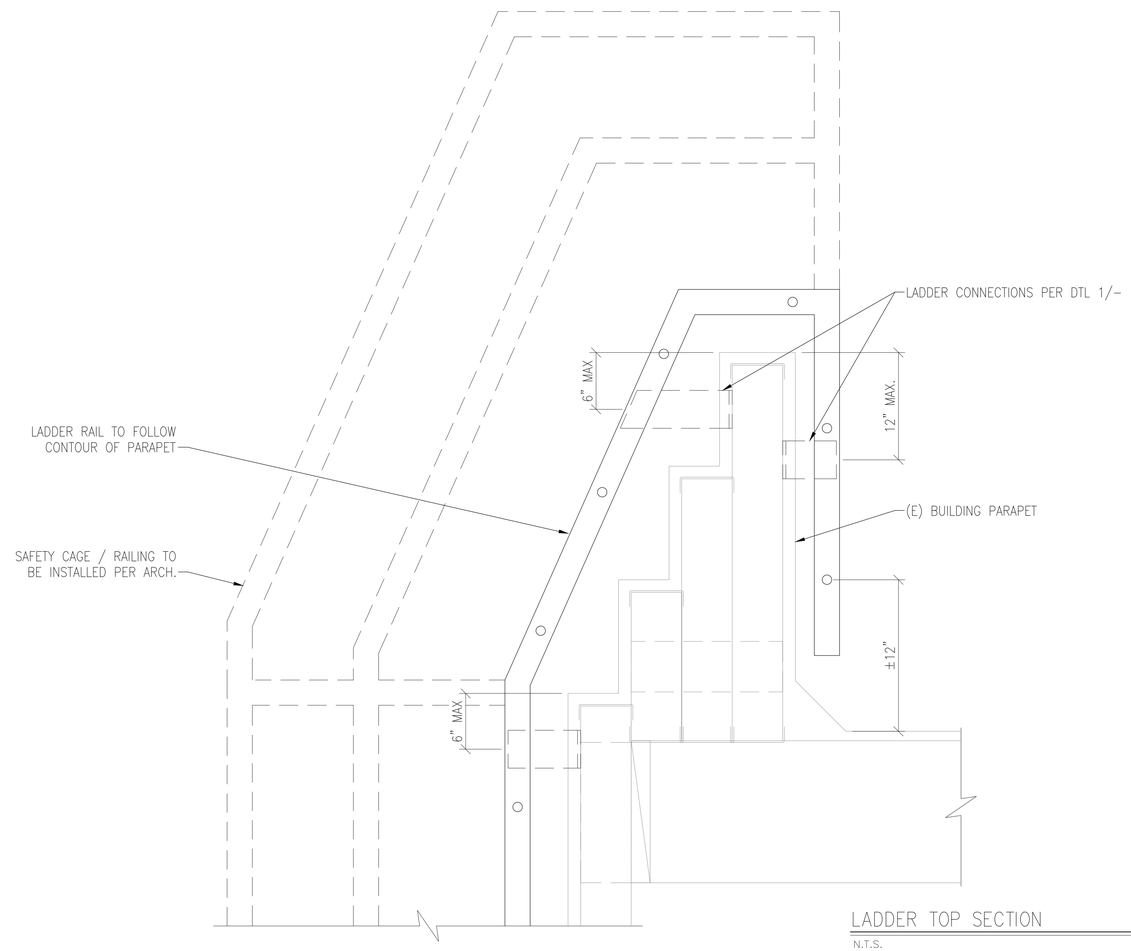


LADDER TOP SECTION (2)

N.T.S.

VECTOR ENGINEERS
651 W. GALENA PARK BLVD., SUITE 101
DRAPER, UT 84020
P: (801) 990-1775 F: (801) 990-1776
www.vectorse.com

M SQUARED WIRELESS
1387 CALLE AVANZADO
SAN CLEMENTE CA 92673 (949) 391-6824

at&t

# LADDER DETAILS

CCL01280 KIRKWOOD PLAZA

---

1630 WEST CAMPBELL AVENUE
CAMPBELL, CA 95008

REGISTERED PROFESSIONAL ENGINEER
WELLS HOLMES
S 8203
STRUCTURAL
STATE OF CALIFORNIA

12/22/2022

| DATE: 12/09/2022 | DESIGNED: JRH | DRAFTER: JRH |
|---|---|---|

REVISIONS

| REV | DATE | DESCRIPTION |
|---|---|---|
| | | |
| | | |
| | | |
| | | |
| | | |

U1703.555.221

S-3 REV 0

Copyright © 2022 Vector Structural Engineering, LLC, *This drawing contains proprietary information belonging to Vector Structural Engineering, LLC, and may be neither wholly nor partially copied or reproduced without the prior written permission of Vector Structural Engineering, LLC.*

| SUMMARY OF SPECIAL INSPECTIONS | | | |
|---|---|---|---|
| NO. | DESCRIPTION OF TYPE OF INSPECTION REQUIRED, LOCATION, REMARKS, ETC | REFERENCED STANDARD | CONTINUOUS / PERIODIC |
| 1). | STEEL CONSTRUCTION | | |
| 1.1 | MATERIAL VERIFICATION OF HIGH-STRENGTH BOLTS, NUTS AND WASHERS: | | |
| | A). IDENTIFICATION MARKINGS TO CONFORM TO ASTM STANDARDS SPECIFIED IN THE APPROVED CONSTRUCTION DOCUMENTS | AISC 360 SECTION A3.3 & APPLICABLE ASTM MATERIAL STANDARDS | PERIODIC |
| 1.2 | INSPECTION OF HIGH-STRENGTH BOLTING: | | |
| | A). SNUG-TIGHT JOINTS | AISC 360 SECTION M2.5 | PERIODIC |
| 1.3 | MATERIAL VERIFICATION OF STRUCTURAL STEEL AND COLD-FORMED STEEL DECK: | | |
| | A). FOR STRUCTURAL STEEL, IDENTIFICATION MARKINGS TO CONFORM TO AISC 360. | AISC 360 SECTION M5.5 | PERIODIC |
| 1.4 | MATERIAL VERIFICATION OF WELD FILLER MATERIALS | | |
| | A). IDENTIFICATION MARKINGS TO CONFORM TO AWS SPECIFICATION IN THE APPROVED CONSTRUCTION DOCUMENTS | AISC 360, SECTION A3.5 AND APPLICABLE AWS A5 DOCUMENT | PERIODIC |
| 1.5 | INSPECTION OF WELDING: | | |
| | A). SINGLE-PASS FILLET WELDS ≤5/16" | AWS D1.1 | PERIODIC |
| | B). ALL WELDED CONNECTIONS SHALL CONFORM TO THE LATEST VERSION OF THE AMERICAN WELDING SOCIETY A.W.S. D1.1. | AWS D1.1 | PERIODIC |
| | C). WELD ELECTRODES SHALL CONFORM TO E70 ELECTRODES OR WIRE. | E-70XX | PERIODIC |
| | D). CONTINUOUS INSPECTION OF SHOP WELDING IS NOT REQUIRED. VISUAL INSPECTION SHALL BE PERFORMED BEFORE AND AFTER GALVANIZING. | VISUAL INSPECTION PER EDR | PERIODIC |
| | E). IF A WELD IS IN QUESTION PER THE VISUAL INSPECTION THEN IT SHALL BE TESTED USING AN APPROPRIATE TEST, EX. DIE PENETRATION, OR MAGNETIC PARTICLE, U.T. ETC. | INSPECT AND REPORT | PERIODIC |
| 1.6 | INSPECTION OF STEEL FRAME JOINT DETAILS FOR COMPLIANCE: | | |
| | A). DETAILS SUCH AS BRACING AND STIFFENING. | INSPECT AND REPORT | PERIODIC |
| | B). MEMBER LOCATIONS. | INSPECT AND REPORT | PERIODIC |
| | C). APPLICATION OF JOINT DETAILS AT EACH CONNECTION. | INSPECT AND REPORT | PERIODIC |

FIBERGLASS REINFORCED PLASTIC (FRP) SHAPES:

1. ALL FRP SHAPES AND PLATE SHALL CONFORM TO STRONGWELL EXTREN 500/525 SERIES.
2. APPLY RESIN ADHESIVE TO ALL FRP MATING SURFACES PRIOR TO BOLTING.
3. STRONGWELL FIBREBOLTS AND NUTS OR EQUAL.
4. ALL CUT EDGES AND HOLES SHALL BE SEALED WITH A RESIN COMPATIBLE WITH THE RESIN MATRIX USED IN THE STRUCTURAL SHAPE.
5. THE FABRICATOR AND CONTRACTOR SHALL EXERCISE PRECAUTIONS NECESSARY TO PROTECT THE FIBERGLASS PULTRUDED STRUCTURAL SHAPES FROM ABUSE TO PREVENT BREAKAGE, NICKS, GOUGES, ETC. DURING FABRICATION, HANDLING, AND INSTALLATION.
6. STRUCTURAL SHAPES SHALL BE FABRICATED AND ASSEMBLED AS INDICATED ON THE DESIGN DRAWINGS.
7. FIBERBOLTS BOLTS AND NUTS SHALL BE TIGHTENED TO AND LOCKED WITH EPOXY AS FOLLOWS:

½" DIAMETER NUTS 8 FT-LBS TORQUE 5/8" DIAMETER NUTS 16 FT-LBS TORQUE

¾" DIAMETER NUTS 24 FT-LBS TORQUE

FIBERGLASS PANEL NOTES:

FABRICATE PANELS TO FIT PER DIMENSIONS SHOWN IN PLAN.
PANELS TO BE MINIMUM 3/8" THICKNESS.

1. PANELS ARE TO BE FABRICATED IN A CONTIGUOUS LAYUP PER PLANS USING RF TRANSPARENT MATERIALS.
2. ARCHITECT SHALL SPECIFY ANY REQUIRED FINISHES OR TREATMENTS TO ACHIEVE DESIRED APPEARANCE.
3. FABRICATOR SHALL USE A GLASS-RESIN RATIO OF 35% + 3%: REINFORCEMENT BY WEIGHT.
4. EACH SKIN SHALL BE FABRICATED WITH GENERAL PURPOSE RESIN OR POLYESTER VINYL RESIN WHERE REQUIRED FOR FIRE TREATMENT, CHOPPED STRAND MAT.
5 CORNER FLANGES MAY BE FASTENED WITH ¾"Ø NON-METALLIC THREADED ROD AND NUTS: STRONGWELL FIBREBOLT STUDS AND NUTS OR EQUIVALENT. A TORQUE WRENCH MUST BE USED TO TIGHTEN FASTENERS TO A MAXIMUM 16 FT-LBS.
6. FRP PANELS AND SHAPES SHALL BE COATED WITH A FLAT GEL-COAT FINISH TO PROVIDE ULTRAVIOLET PROTECTION.
7. ALL CUT AND DRILLED EDGES SHALL BE COATED WITH RESIN.
8. FABRICATOR AND INSTALLER SHALL TEST FIT ALL PANELS PRIOR TO FINAL ASSEMBLY/INSTALLATION TO ASSURE SQUARENESS AND CORNER FITS.

WOOD:

1. ALL PLYWOOD SHALL BE C-D EXTERIOR GRADE SHEATHING STRUCTURAL 2 OR BETTER WITH EXTERIOR GLUE AND SHALL BEAR THE STAMP OF APPROVED TESTING AGENCY.
2. ALL FRAMED WALLS ARE TO BE FRAMED AS SHEAR WALLS: 1/2" WITH #10 FLAT HEAD SCREWS AT 6" ON CENTER AT ALL EDGES AND 12" ON CENTER AT INTERIOR STUDS.
3. ALL SAWN LUMBER SHALL BE DF#2 OR BETTER.
4. FASTENING SCHEDULE PER 2019 EDITION OF THE CALIFORNIA BUILDING CODE, TABLE NO.2304.9.3.1 UNLESS NOTED OTHERWISE.
5. DO NOT NOTCH JOISTS, RAFTERS OR BEAMS EXCEPT WHERE SHOWN IN DETAILS. OBTAIN ENGINEER'S APPROVAL FOR ANY HOLES OR NOTCHES NOT DETAILED.
6. CONNECTION HARDWARE SHALL BE BY SIMPSON STRONG-TIE, OR ICC APPROVED EQUAL.
7. ALL SILLS OR PLATES RESTING ON CONCRETE OR MASONRY SHALL BE PRESSURE TREATED
8. DOUGLAS FIR. BOLTS SHALL BE PLACED 9 INCHES FROM THE END OF A PLATE (U.N.O.), OR FROM A NOTCH GRATER THAN ½" THE WIDTH OF THE PLATE, AND SPACED AT INTERVALS NOTED.
9. BOLT HOLES SHALL BE 1/16" MAXIMUM LARGER THAN THE BOLT SIZE. RE-TIGHTEN ALL NUTS PRIOR TO CLOSING IN.

# KIRKWOOD PLAZA SHOPPING CENTER
# ROOFTOP ANTENNA ENCLOSURE
# at&t NO: CCL01280

1630 W. CAMPBELL AVE, CAMPBELL, CA 95008
LARAMIE COUNTY, LAT: 37° 17' 6.27" N, LONG: -121° 58' 47.2836" W

GENERAL NOTES:

1. THE CONTRACTOR SHALL VERIFY DIMENSIONS, CONDITIONS, AND ELEVATIONS BEFORE STARTING WORK. SEE SPECIAL CONSTRUCTION NOTES THIS PAGE. THE ENGINEER SHALL BE NOTIFIED IMMEDIATELY IF ANY DISCREPANCIES ARE FOUND.
2. THE TYPICAL NOTES AND DETAILS SHALL APPLY IN ALL CASES UNLESS SPECIFICALLY DETAILED ELSEWHERE. WHERE NO DETAIL IS SHOWN, THE CONSTRUCTION SHALL BE AS SHOWN FOR OTHER SIMILAR WORK AND AS REQUIRED BY THE BUILDING CODE.
3. THE CONTRACTOR SHALL BE RESPONSIBLE FOR COMPLIANCE WITH LOCAL CONSTRUCTION SAFETY ORDERS. APPROVAL OF SHOP DRAWINGS BY THE ARCHITECT OR STRUCTURAL ENGINEER SHALL NOT BE CONSTRUED AS ACCEPTING THIS RESPONSIBILITY.
4. ALL STRUCTURAL FRAMING MEMBERS SHALL BE ADEQUATELY SHORED AND BRACED DURING ERECTION AND UNTIL FULL LATERAL AND VERTICAL SUPPORT IS PROVIDED BY ADJOINING MEMBERS.

CONSTRUCTION NOTES:

1. IF EXISTING CONDITIONS ARE NOT AS INDICATED ON DRAWINGS, THE CONTRACTOR SHALL CONTACT THE STRUCTURAL ENGINEER (GLEN HUNT) AT ISE INCORPORATED, FOR IN FIELD ADJUSTMENT(S), PRIOR TO PROCEEDING WITH ANY CONSTRUCTION.
2. CONTRACTOR TO FIELD VERIFY AND/OR FIELD LOCATE ALL ITEMS LABELED AS FIELD VERIFY OR FIELD LOCATE.

STRUCTURAL STEEL:

1. ALL STRUCTURAL STEEL CODE CHECKS BASED ON THE AISC, 14TH EDITION PER THE ASCE 7 STANDARD.
2. VERIFY ALL STEEL MATERIAL GRADES WITH STRUCTURAL DESIGN REPORT.
3. WIDE FLANGE BEAMS (W BEAM) A992 (50 KSI).
4. ALL STEEL PIPE TO BE PER ASTM A53 GR B (35 KSI), U.N.O.
5. ALL STEEL ROUND TUBES (HSS) TO BE PER ASTM A500 GR. B (42 KSI), U.N.O
6. ALL OTHER STRUCTURAL STEEL SHAPES & PLATES SHALL BE PER ASTM A36 (36 KSI), U.N.O.
7. ALL BOLTS FOR STEEL-TO-STEEL CONNECTIONS SHALL BE ASTM A325, U.N.O.
8. ALL BOLTED CONNECTIONS SHALL BE TIGHTENED TO "SNUG TIGHT" CONDITION AS DEFINED BY AISC.
9. ALL WELDING SHALL BE PERFORMED BY CERTIFIED WELDERS IN ACCORDANCE WITH THE LATEST EDITION OF THE AMERICAN WELDING SOCIETY (AWS) D1.1
10. ALL STEEL SURFACES SHALL BE GALVANIZED IN ACCORDANCE WITH THE ASTM A123 AND ASTM A153 STANDARDS, U.N.O.

***ISE INCORPORATED CONDUCTED AN ON-SITE NON INVASIVE INSPECTION OF THE EXISTING CONSTRUCTION, BASIC EXTERIOR DIMENSIONS AND GENERAL ARRANGEMENT OF EXISTING BUILDING CUPOLA. DIMENSIONS USED FOR DESIGN WERE TAKEN FROM THE FOLLOWING DOCUMENTS:***
DOCUMENTS PROVIDED BY M SQUARED WIRELESS DATED 12/07/2021 AS 90% DC'S AS WELL AS THE KIRKWOOD PLAZA SHOPPING CENTER EXPANSION AND RENOVATION DRAWINGS (04-20-90) ALONG WITH THE BUILDING DRAWINGS PROVIDED IN PART DATED 03-07-90 BY HAGMAN ASSOCIATES ARCHITECTS.

***ISE INCORPORATED*** AND ***VALMONT*** ASSUME NO LIABILITY FOR AS BUILT GEOMETRY THAT DOES NOT MATCH THOSE PROVIDED IN THESE DOCUMENTS. THE DESIGN HEREIN IS INTENDED FOR "STICK BUILT" CONSTRUCTION USING MEMBERS AND CONFIGURATION AS SHOWN IN THESE DRAWINGS. IT SHOULD BE EXPECTED THAT ACTUAL FIELD DIMENSIONS WILL VARY FROM THOSE SHOWN IN THESE DRAWINGS. A CONTRACTOR FAMILULAR WITH THIS TYPE OF CONSTRUCTION IS RECOMMENDED.

**SPECIAL INSPECTIONS:**

REINFORCED CONCRETE
ANCHORS IN CONCRETE
STRUCTURAL STEEL
HIGH STRENGTH BOLTING

CODE COMPLIANCE:

CODE: 2019 IBC, ASCE 7-16
WIND: 95 MPH Ultimate Wind Speed
Exposure C, Topographic Cat 1, Risk Cat II
Ground Elevation ±233'
SEISMIC DESIGN CLASS: NA
SOIL SITE CLASS: D
SS = 2.026, S1 = 0.723
SDS = 1.621, SD1 = NA

CONNECTIONS
PROCEDURE FOR MAKING STRUCTURAL EPOXY JOINTS

ADHESIVE: WELD-ON 45 OR 3M 540
PER MANUFACTURE SPECIFICATIONS & RECOMMENDATIONS.

Surface Preparation
1) Sand mating surfaces with 80 grit sandpaper until the surface gloss has been removed. The surfacing veil must be ground off to expose the glass reinforcement. Sand blasting equipment can also be used.
2) Remove all dust with a clean cloth; air blasting equipment may also be used. Avoid recontamination of the surface from handling. Mixing of Epoxy Mix equal volume portions of the base and hardener in a small wax coated paper cup with a clean stick until a uniform gray color is attained and all marbled appearance is gone.

NOTE:
Other adhesive systems compatible with fiberglass can be utilized and the manufacturer's mixing instructions for these systems should be followed.

Application and Cure
1) Apply the mixed epoxy uniformly to all surfaces to be joined. A thin application is often more beneficial than a thick application.
2) Avoid introducing moisture into the joint.
3) Join the surfaces to be bonded. The pot life at 77°F for a 3 oz. mixture of equal volumes of base and hardener is 2.5 hours.
4) Secure the joint with clamps (or rivets or bolts) and allow 24 hours for a full cure. The assembly can often be handled with reasonable care in less than 8 hours. The structure should not be required to support its design load until at least 48 hours (at 70°F) after bonding. Lower temperatures require a longer cure.
5) After securing the joint, wipe away excess epoxy.

DRAWING SCALES:
FULL SCALE (1:1) (100%) ON (ANSI D) 34" X 22"
HALF SCALE (1:2) (50%) ON 11" X 17"

SHEET INDEX


| | |
|---|---|
| GSN | GENERAL NOTES |
| S1.0 | COPULA PLANS & SECTION AT TRUSS |
| S2.0 | SECTION AT RIDGE BEAM & DETAILS |
| S3.0 | FRAMING DETAILS |
| S4.0 | WALL FRAMING ELEVATIONS AND SECTIONS |
| S5.0 | SECTOR "B" PLAN & DETAILS |
| FRP1.0 | FRP SCREEN WALL PLANS |
| FRP2.0 | FRP PANEL 'A1' & DETAILS |
| FRP3.0 | FRP PANEL 'A2' & DETAILS |
| FRP4.0 | FRP PANEL 'A3' & POST 'C1' |
| FRP5.0 | SECTOR 'B' ENCLOSURE ASSEMBLY & FRP PANEL 'B1' & 'B2' |



at&t

LARSON
A valmont COMPANY
1501 South Euclid Avenue Tucson, AZ 85713
(520) 294-3900
www.valmontlarson.com
LARSON JOB #: A545094

ISE Incorporated
Structural Engineers
P.O. BOX 50039
Phoenix, Arizona 85076
PHONE: 602-403-8614
www.ise-inc.biz
ISE JOB #: 17887


KIRKWOOD PLAZA SHOPPING CENTER
ROOFTOP ANTENNA ENCLOSURE
at&t NO: CCL01280
GENERAL NOTES
1630 W. CAMPBELL AVE, CAMPBELL, CA 95008
LARAMIE COUNTY, LAT: 37° 17' 6.27" N, LONG: -121° 58' 47.2836" W


THIS DESIGN DRAWING IS PROPRIETARY & CONFIDENTIAL
THE INFORMATION IN THIS DRAWING IS THE SOLE PROPERTY OF LARSON. ANY REPRODUCTION, MODIFICATION, OR MANUFACTURING IN PART, OR AS A WHOLE, WITHOUT THE WRITTEN PERMISSION OF LARSON IS PROHIBITED.


REGISTERED PROFESSIONAL ENGINEER GLEN HUNT NO. 67146 Aug 10, 2022 CIVIL STATE OF CALIFORNIA

PROGRESS LOG

| | | | |
|---|---|---|---|
| 0 | 08/09/22 | ISSUED TO CLIENT | CK |
| A | 06/22/22 | ISSUED FOR REVIEW | CK |

SHEET NUMBER: GSN
PROGRESS: 0
DRAWING DATE: August 10, 2022

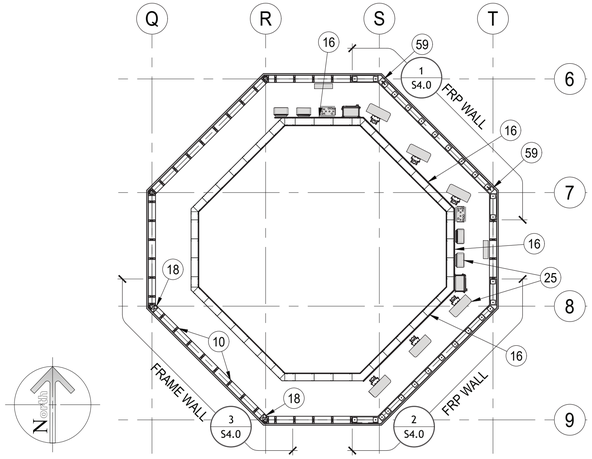


4 SECTION THROUGH ANTENNAS — SCALE: 3/16" = 1'-0"

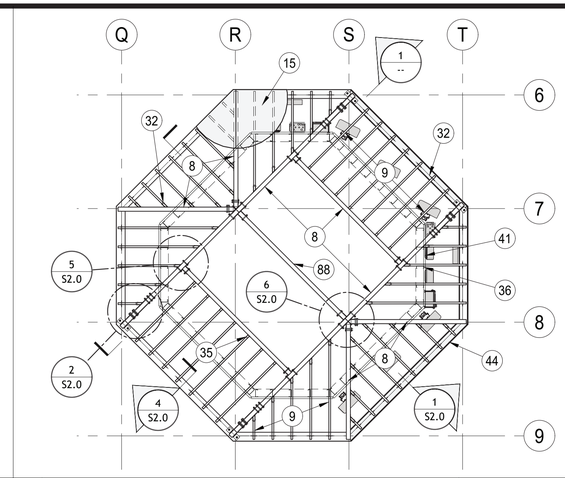


5 ROOF FRAMING PLAN — SCALE: 3/16" = 1'-0"

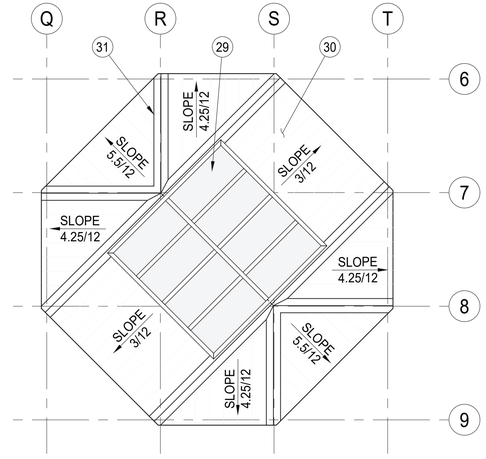


6 ROOF PLAN — SCALE: 3/16" = 1'-0"

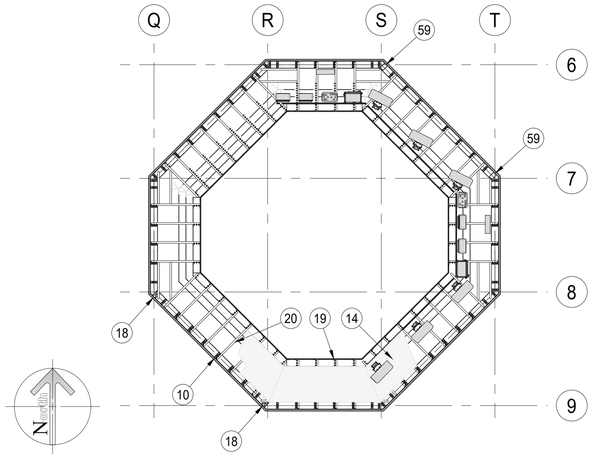


3 SECTION AT SOFFIT FRAMING — SCALE: 3/16" = 1'-0"

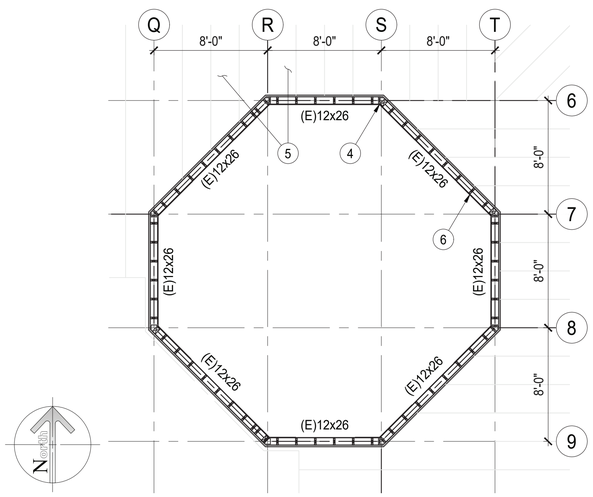


2 SECTION AT ± 29'-4" AFG (EXISTING FRAMING PLAN) — SCALE: 3/16" = 1'-0"

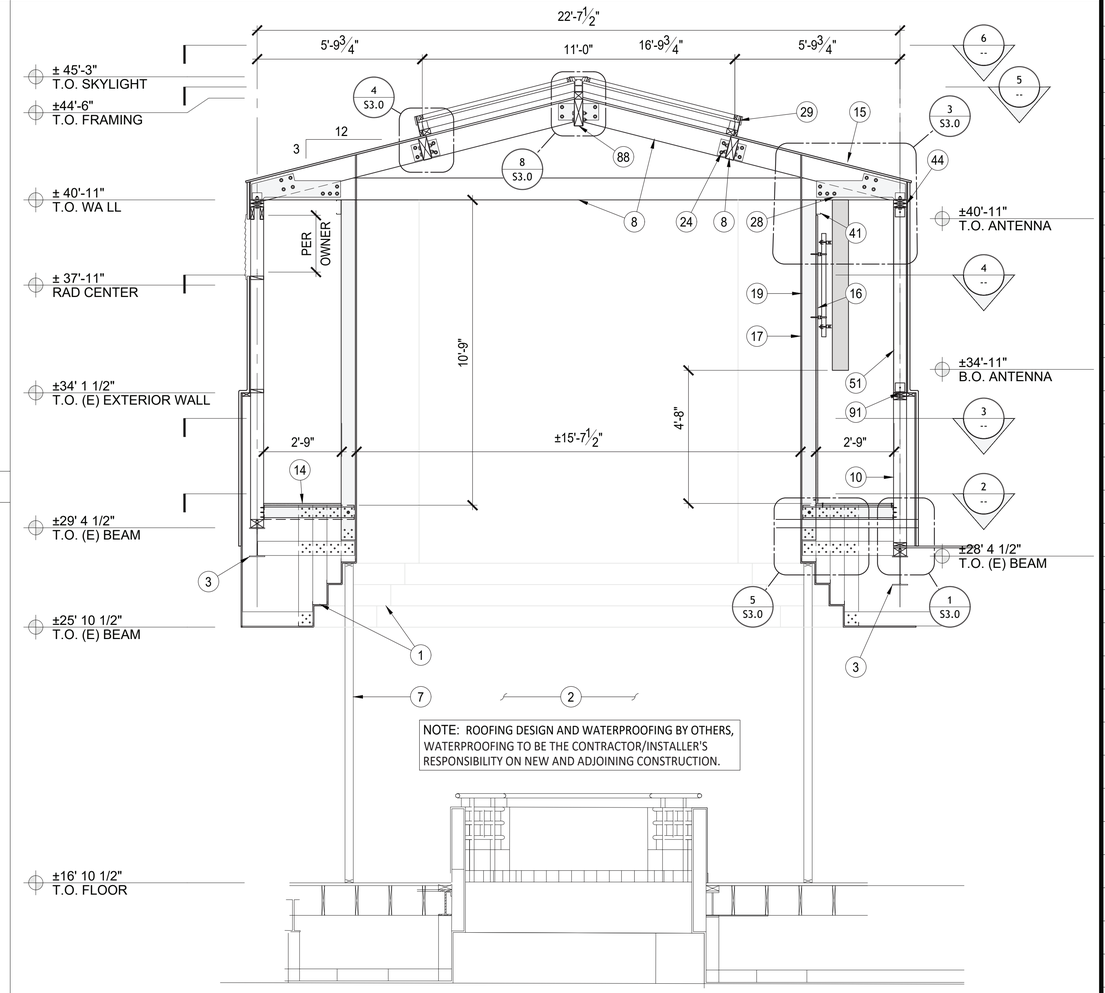


NOTE: ROOFING DESIGN AND WATERPROOFING BY OTHERS, WATERPROOFING TO BE THE CONTRACTOR/INSTALLER'S RESPONSIBILITY ON NEW AND ADJOINING CONSTRUCTION.

1 SECTION AT TRUSS — SCALE: 3/16" = 1'-0"

## KEY NOTES

| | | | |
|---|---|---|---|
| 46 | 2"Ø ACCESS HOLE | MARK | DESCRIPTION |
| 47 | 3/8" FRP SPACER | 1 | (E) METAL FRAMED SOFFIT/ROTUNDA |
| 48 | 5/16"Ø HOLE | 2 | (E) INTERIOR ATRIUM SPACE AT SECOND FLOOR |
| 49 | 2 WRAP FRP BOND | 3 | (E) W12x26 FRAMING |
| 50 | FRP SHEATHING/PANEL SEAM | 4 | (E) HSS 5x5x1/4" COLUMN BELOW |
| 51 | BUILT UP FRP SCREEN PANEL | 5 | (E) 2x12 JOISTS @ 24" O.C. |
| 52 | 3/8" CARBONCORE HONEYCOMB SKIN | 6 | (E) FRAMING TO REMAIN |
| 53 | FRP C5 1/2"x 1 1/2"x 1/4" (PLATE) | 7 | TEMPORARY SHORING 2x6 STUDS @ 16" O.C & 2x6 PLATES. |
| 54 | FRP ∠4x4x5/16" x 4" LONG CLIP ANGLE | 8 | 4x10 DF |
| 55 | FRP C5 1/2"x 1 1/2"x 1/4" (STUD) | 9 | 2x10 DF @ 16" O.C. |
| 56 | NOT USED | 10 | 2x6 DF STUDS @ 16" O.C. |
| 57 | 5/8" FIBREBOLT | 11 | (2) 2x6 HEADER @ VENT OPENINGS |
| 58 | FRP ∠4x4x5/16" | 12 | 2x6 BLOCKING |
| 59 | FRP 3 1/2" x 5 1/2" x 1/4" TUBE POST AT TRUSS BEARING | 13 | (2) 2x6 PLATE |
| 60 | EFIS FINISH TO MATCH EXISTING | 14 | 3/4" PLYWOOD CAT WALK SHEATHING |
| 61 | 5/8" FIBREBOLT | 15 | 3/4" PLYWOOD ROOF SHEATHING |
| 62 | FRP ∠4x4x3/16" | 16 | 3/4" PLYWOOD WALL SHEATHING AT EQUIPMENT MOUNTING LOCATION |
| 63 | 11/16"Ø HOLE | 17 | FINISH INTERIOR TO MATCH EXISTING |
| 64 | CLOSED CELL EXPANSIVE FOAM, FILL AND TRIM FLUSH | 18 | 4x6 POST AT TRUSS BEARING |
| 65 | GUSSET PLATE GP1 | 19 | 600S162-54 (6" 16 GA STUD) |
| 66 | GUSSET PLATE GP2 | 20 | 600S162-54 (6" 16 GA JOIST) |
| 67 | GUSSET PLATE GP3 | 21 | 600T250-97 (6" 16 GA TRACK) |
| 68 | 3/8" FRP PLATE | 22 | 1/4"x 1" TEK SCREW |
| 69 | 11/16"Ø HOLE FIELD DRILL | 23 | 5/8"Ø A325 BOLT IN 11/16" Ø HOLE |
| 70 | FRP 4" x 1/4" SQ TUBE | 24 | ∠6x4x 3/8" |
| 71 | FRP ∠3x3x1/4" | 25 | ANTENNA/EQUIPMENT BY OTHERS |
| 72 | 5/8"Ø ALL-THREAD THRU-BOLT | 26 | Ø2.375" O.D. SCH 40 PIPE |
| 73 | 2x10 DF BACKER PLANK | 27 | 3/8"Ø U-BOLT BOLT |
| 74 | 1/2" NEOPRENE PAD | 28 | 3/8" A36 PLATE |
| 75 | NOT USED | 29 | SKYLIGHT BY OTHERS |
| 76 | (E) T.S. 3x3x1/4" @ 48" O.C | 30 | 22 GA STANDING SEAM ROOFING TO MATCH EXISTING |
| 77 | (E) PARAPET | 31 | 22 GA HIP COVER TO MATCH EXISTING |
| 78 | (E) SCREEN WALL | 32 | SIMPSON LSSR210Z SLOPED SKEWED HANGER |
| 79 | (E) ROOF | 33 | SIMPSON H1 HURRICANE TIE |
| 80 | 5/8"Ø A307 BOLT | 34 | SIMPSON A34 FRAMING ANGLE |
| 81 | 1/2" A36 PLATE | 35 | SIMPSON HU210 (SLOPED) |
| 82 | SIMPSON H2.5A | 36 | PLACE STUDS AS JOISTS OCCUR FOR SOFFIT SUSPENSION |
| 83 | 2x SOLID BLOCKING | 37 | SIMPSON ECC046 |
| 84 | (E) 4X PLATE/NAILER | 38 | SIMPSON ECC046 (MODIFIED) |
| 85 | (E) 3/4"Ø THREADED STUD @ 24" O.C. | 39 | 3/8" MIN STRUCTURAL SHEATHING AT EXTERIOR |
| 86 | SIMPSON H2.5A STUD-PLATE TIE @ 48" O.C. MAX. & AS SHOWN | 40 | VENT PER OWNER |
| 87 | SIMPSON RSP4 STUD-PLATE TIE, TYP AS SHOWN | 41 | 600S162-54 (6" 16 GA STUD) BRIDGING AT TOP OF WALL |
| 88 | 4X12 DF RIDGE BEAM | 42 | SIMPSON H2.5A HURRICANE TIE |
| 89 | 8d NAIL AT 12" O.C. FIELD 6" O.C. ALL SUPPORTED EDGES | 43 | #10 x 1 1/4" SCREW @ 6" O.C. ALL SUPPORTED EDGES & 12" O.C. FIELD |
| 90 | 16d NAIL @ 18" O.C. ALTERNATE LOCATIONS | 44 | DB 2x6 LAMINATED (GLUED) D.F. BEAM @ FRP "WINDOW" |
| 91 | SIMPSON CBT8200 WAFER HEAD SCREW OR EQUAL | 45 | 2x SUB FACIA |

at&t


LARSON
A valmont COMPANY
1501 South Euclid Avenue Tucson, AZ 85713
(520) 294-3900
www.valmontlarson.com
LARSON JOB #: A545094

ISE Incorporated
Structural Engineers
P.O. BOX 50039
Phoenix, Arizona 85076
PHONE: 602-403-8614
www.ise-inc.biz
ISE JOB #: 17887


# KIRKWOOD PLAZA SHOPPING CENTER ROOFTOP ANTENNA ENCLOSURE
## at&t NO: CCL01280
## COPULA PLANS & SECTION AT TRUSS

1630 W. CAMPBELL AVE, CAMPBELL, CA 95008
LARAMIE COUNTY, LAT: 37° 17' 6.27" N, LONG: -121° 58' 47.2836" W


THIS DESIGN DRAWING IS PROPRIETARY & CONFIDENTIAL
THE INFORMATION IN THIS DRAWING IS THE SOLE PROPERTY OF LARSON. ANY REPRODUCTION, MODIFICATION, OR MANUFACTURING IN PART, OR AS A WHOLE, WITHOUT THE WRITTEN PERMISSION OF LARSON IS PROHIBITED.


REGISTERED PROFESSIONAL ENGINEER — GLADE V. HUNTER — NO. 67146 — Aug 10, 2022 — CIVIL — STATE OF CALIFORNIA

PROGRESS LOG

| | | | |
|---|---|---|---|
| 0 | 08/09/22 | ISSUED TO CLIENT | CK |
| A | 06/22/22 | ISSUED FOR REVIEW | CK |

SHEET NUMBER: S1.0

PROGRESS: 0

DRAWING DATE: August 10, 2022

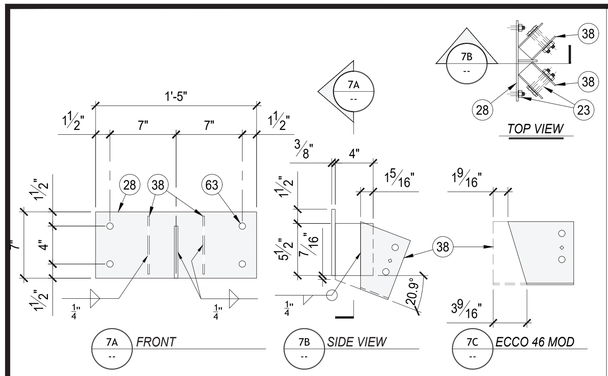


7 HIP BEAM CONNECTOR — SCALE: 1 1/2" = 1'-0"

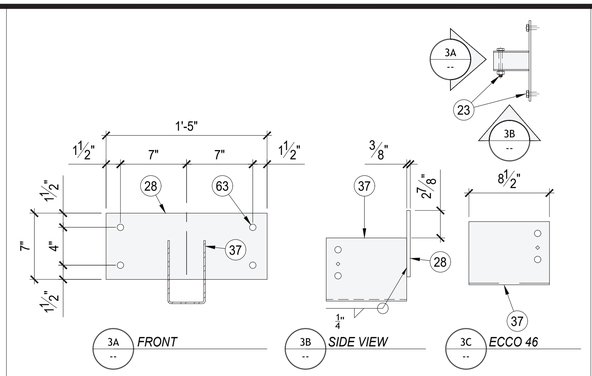


3 RIDGE BEAM CONNECTOR — SCALE: 1 1/2" = 1'-0"

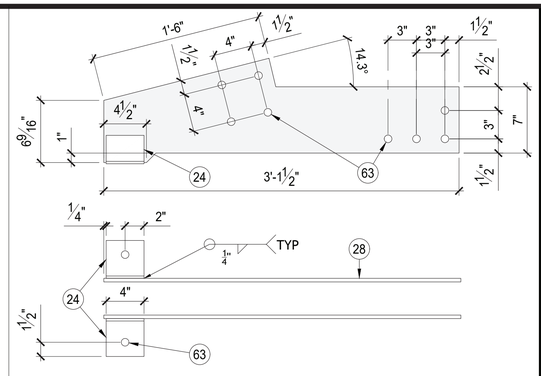


2 TRUSS GUSSET PLATE (3/8" A36 PLATE) — SCALE: 1 1/2" = 1'-0"

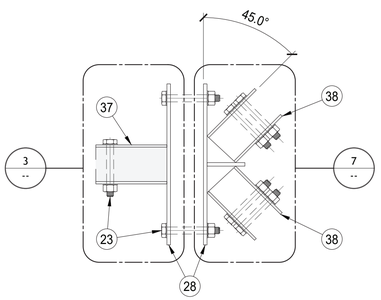


6 RIDGE / HIP ASSEMBLY — SCALE: 1 1/2" = 1'-0"

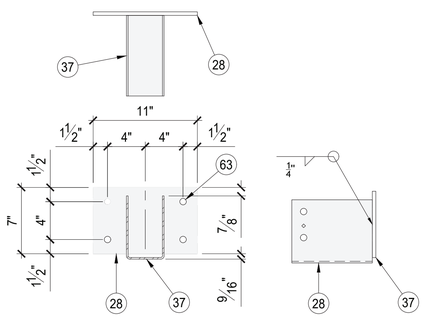

5 BEAM ATTACHMENT BRACKET — SCALE: 1 1/2" = 1'-0"

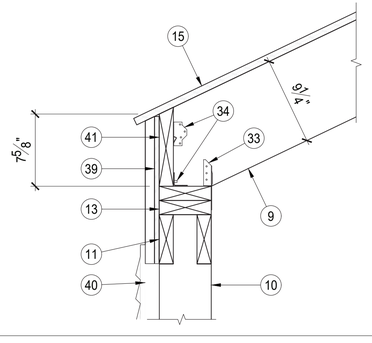

4 EAVE FRAMING AT WOOD FRAME WALL — SCALE: 1 1/2" = 1'-0"

NOTE: ROOFING DESIGN AND WATERPROOFING BY OTHERS, WATERPROOFING TO BE THE CONTRACTOR/INSTALLER'S RESPONSIBILITY ON NEW AND ADJOINING CONSTRUCTION.

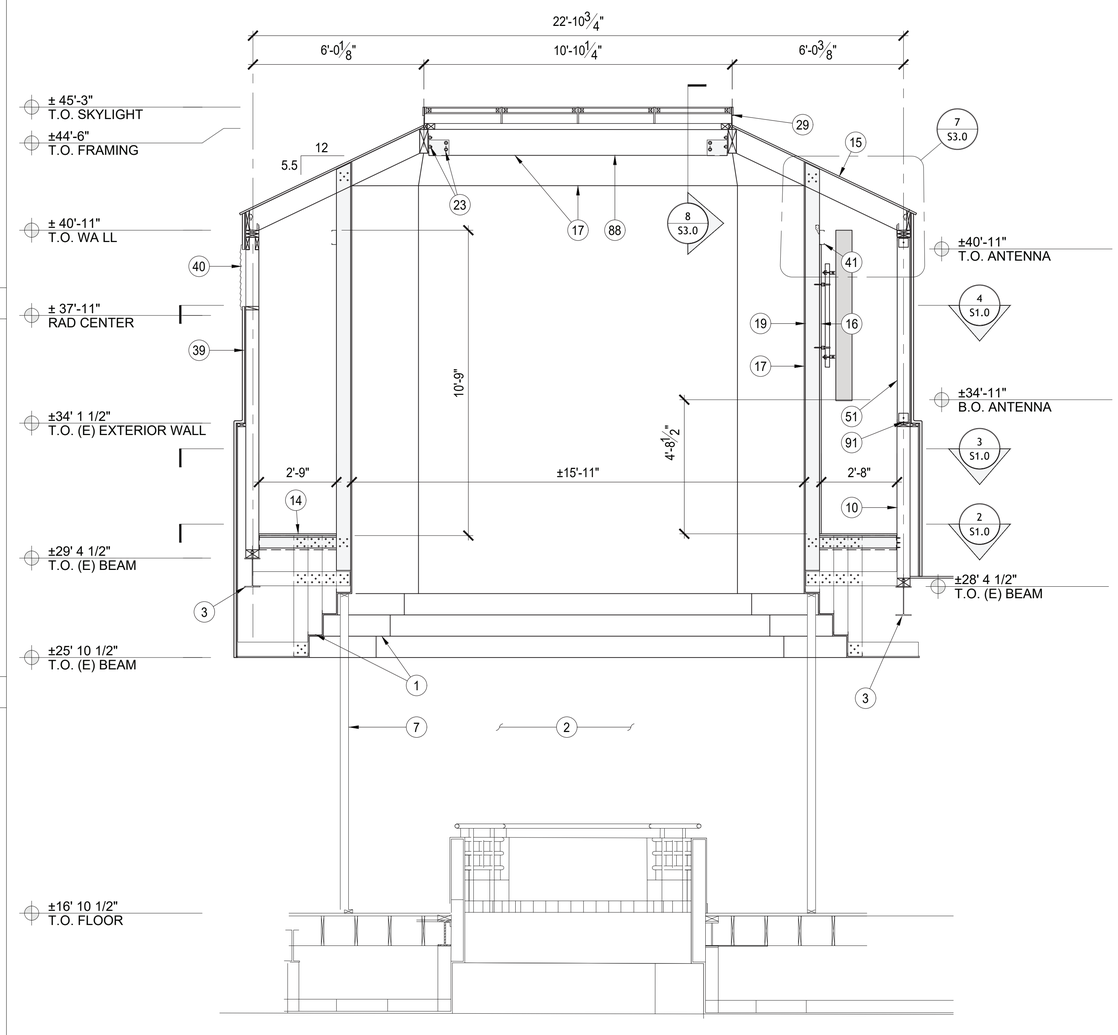


1 SECTION AT RIDGE BEAM — SCALE: 3/16" = 1'-0"

## KEY NOTES

| | | | |
|---|---|---|---|
| 46 | 2"Ø ACCESS HOLE | MARK | DESCRIPTION |
| 47 | 3/8" FRP SPACER | 1 | (E) METAL FRAMED SOFFIT/ROTUNDA |
| 48 | 5/16"Ø HOLE | 2 | (E) INTERIOR ATRIUM SPACE AT SECOND FLOOR |
| 49 | 2 WRAP FRP BOND | 3 | (E) W12x26 FRAMING |
| 50 | FRP SHEATHING/PANEL SEAM | 4 | (E) HSS 5x5x1/4" COLUMN BELOW |
| 51 | BUILT UP FRP SCREEN PANEL | 5 | (E) 2x12 JOISTS @ 24" O.C. |
| 52 | 3/8" CARBONCORE HONEYCOMB SKIN | 6 | (E) FRAMING TO REMAIN |
| 53 | FRP C5 1/2"x 1 1/2"x 1/4" (PLATE) | 7 | TEMPORARY SHORING 2x6 STUDS @ 16" O.C & 2x6 PLATES. |
| 54 | FRP ∠4x4x5/16" x 4" LONG CLIP ANGLE | 8 | 4x10 DF |
| 55 | FRP C5 1/2"x 1 1/2"x 1/4" (STUD) | 9 | 2x10 DF @ 16" O.C. |
| 56 | NOT USED | 10 | 2x6 DF STUDS @ 16" O.C. |
| 57 | 5/8" FIBREBOLT | 11 | (2) 2x6 HEADER @ VENT OPENINGS |
| 58 | FRP ∠4x4x5/16" | 12 | 2x6 BLOCKING |
| 59 | FRP 3 1/2" x 5 1/2" x 1/4" TUBE POST AT TRUSS BEARING | 13 | (2) 2x6 PLATE |
| 60 | EFIS FINISH TO MATCH EXISTING | 14 | 3/4" PLYWOOD CAT WALK SHEATHING |
| 61 | 5/8" FIBREBOLT | 15 | 3/4" PLYWOOD ROOF SHEATHING |
| 62 | FRP ∠4x4x5/16" | 16 | 3/4" PLYWOOD WALL SHEATHING AT EQUIPMENT MOUNTING LOCATION |
| 63 | 11/16"Ø HOLE | 17 | FINISH INTERIOR TO MATCH EXISTING |
| 64 | CLOSED CELL EXPANSIVE FOAM, FILL AND TRIM FLUSH | 18 | 4x6 POST AT TRUSS BEARING |
| 65 | GUSSET PLATE GP1 | 19 | 600S162-54 (6" 16 GA STUD) |
| 66 | GUSSET PLATE GP2 | 20 | 600S162-54 (6" 16 GA JOIST) |
| 67 | GUSSET PLATE GP3 | 21 | 600T250-97 (6" 16 GA TRACK) |
| 68 | 3/8" FRP PLATE | 22 | 1/4"x 1" TEK SCREW |
| 69 | 11/16"Ø HOLE FIELD DRILL | 23 | 5/8"Ø A325 BOLT IN 11/16" Ø HOLE |
| 70 | FRP 4" x 1/4" SQ TUBE | 24 | ∠6x4x 3/8" |
| 71 | FRP ∠3x3x1/4" | 25 | ANTENNA/EQUIPMENT BY OTHERS |
| 72 | 5/8"Ø ALL-THREAD THRU-BOLT | 26 | Ø2.375" O.D. SCH 40 PIPE |
| 73 | 2x10 DF BACKER PLANK | 27 | 3/8"Ø U-BOLT BOLT |
| 74 | 1/2" NEOPRENE PAD | 28 | 3/8" A36 PLATE |
| 75 | NOT USED | 29 | SKYLIGHT BY OTHERS |
| 76 | (E) T.S. 3x3x1/4" @ 48" O.C | 30 | 22 GA STANDING SEAM ROOFING TO MATCH EXISTING |
| 77 | (E) PARAPET | 31 | 22 GA HIP COVER TO MATCH EXISTING |
| 78 | (E) SCREEN WALL | 32 | SIMPSON LSSR210Z SLOPED SKEWED HANGER |
| 79 | (E) ROOF | 33 | SIMPSON H1 HURRICANE TIE |
| 80 | 5/8"Ø A307 BOLT | 34 | SIMPSON A34 FRAMING ANGLE |
| 81 | 1/2" A36 PLATE | 35 | SIMPSON HU210 (SLOPED) |
| 82 | SIMPSON H2.5A | 36 | PLACE STUDS AS JOISTS OCCUR FOR SOFFIT SUSPENSION |
| 83 | 2x SOLID BLOCKING | 37 | SIMPSON ECC046 |
| 84 | (E) 4X PLATE/NAILER | 38 | SIMPSON ECC046 (MODIFIED) |
| 85 | (E) 3/4"Ø THREADED STUD @ 24" O.C. | 39 | 3/8" MIN STRUCTURAL SHEATHING AT EXTERIOR |
| 86 | SIMPSON H2.5A STUD-PLATE TIE @ 48" O.C. MAX. & AS SHOWN | 40 | VENT PER OWNER |
| 87 | SIMPSON RSP4 STUD-PLATE TIE, TYP AS SHOWN | 41 | 600S162-54 (6" 16 GA STUD) BRIDGING AT TOP OF WALL |
| 88 | 4X12 DF RIDGE BEAM | 42 | SIMPSON H2.5A HURRICANE TIE |
| 89 | 8d NAIL AT 12" O.C. FIELD 6" O.C. ALL SUPPORTED EDGES | 43 | #10 x 1 1/2" SCREW @ 6" O.C. ALL SUPPORTED EDGES & 12" O.C. FIELD |
| 90 | 16d NAIL @ 18" O.C. ALTERNATE LOCATIONS | 44 | DB 2x6 LAMINATED (GLUED) D.F. BEAM @ FRP "WINDOW" |
| 91 | SIMPSON CBT8200 WAFER HEAD SCREW OR EQUAL | 45 | 2x SUB FACIA |


at&t

LARSON
A valmont COMPANY
1501 South Euclid Avenue Tucson, AZ 85713
(520) 294-3900
www.valmontlarson.com
LARSON JOB #: A545094

ISE Incorporated
Structural Engineers
P.O. BOX 50039
Phoenix, Arizona 85076
PHONE: 602-403-8614
www.ise-inc.biz
ISE JOB #: 17887


# KIRKWOOD PLAZA SHOPPING CENTER ROOFTOP ANTENNA ENCLOSURE
## at&t NO: CCL01280
## SECTION AT RIDGE BEAM & DETAILS

1630 W. CAMPBELL AVE, CAMPBELL, CA 95008
LARAMIE COUNTY, LAT: 37° 17' 6.27" N, LONG: -121° 58' 47.2836" W


THIS DESIGN DRAWING IS PROPRIETARY & CONFIDENTIAL
THE INFORMATION IN THIS DRAWING IS THE SOLE PROPERTY OF LARSON. ANY REPRODUCTION, MODIFICATION, OR MANUFACTURING IN PART, OR AS A WHOLE, WITHOUT THE WRITTEN PERMISSION OF LARSON IS PROHIBITED.


REGISTERED PROFESSIONAL ENGINEER — CLAY CRUMPS — NO. 67146 — Aug 10, 2022 — CIVIL — STATE OF CALIFORNIA

PROGRESS LOG

| | | | |
|---|---|---|---|
| 0 | 08/09/22 | ISSUED TO CLIENT | CK |
| A | 06/22/22 | ISSUED FOR REVIEW | CK |

SHEET NUMBER: S2.0
PROGRESS: 0
DRAWING DATE: August 10, 2022

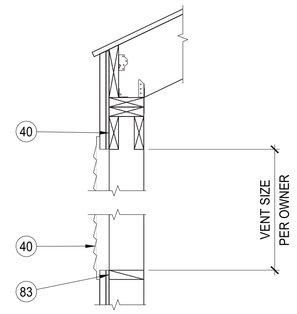


16 NOT USED

12 VENT OPENING DETAIL — SCALE: 1 1/2" = 1'-0"

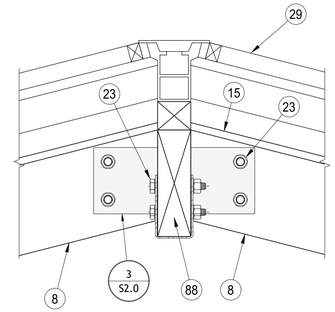


8 RIDGE DETAIL

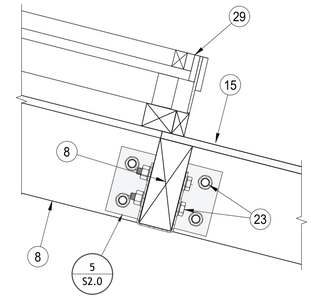


4 DETAIL — SCALE: 1 1/2" = 1'-0"

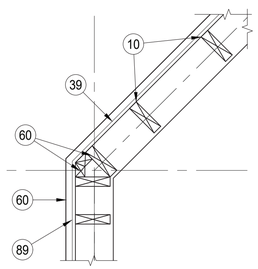


15 NOT USED

11 2X FRAME WALL CORNER FRAMING — SCALE: 1 1/2" = 1'-0"

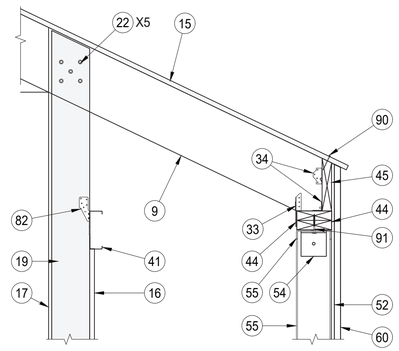


7 HIP ROOF JOIST DETAIL — SCALE: 1" = 1'-0"

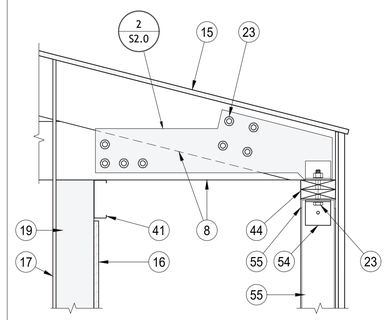


3 HIP RIDGE TRUSS BEARING DETAIL — SCALE: 1" = 1'-0"

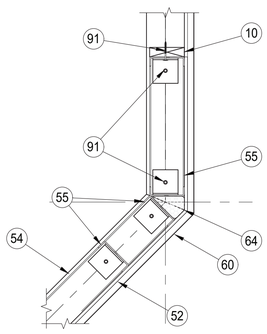


14 NOT USED

10 45° CORNER AT FRP CHANNEL FRAMING — SCALE: 1 1/2" = 1'-0"

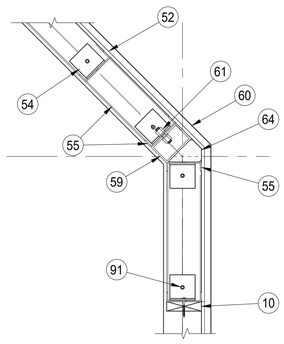


6 45° CORNER AT FRP POST — SCALE: 1 1/2" = 1'-0"

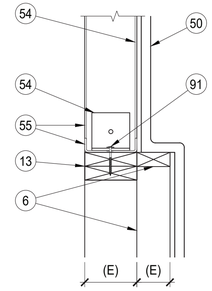


2 FRP PANEL BASE — SCALE: 1 1/2" = 1'-0"

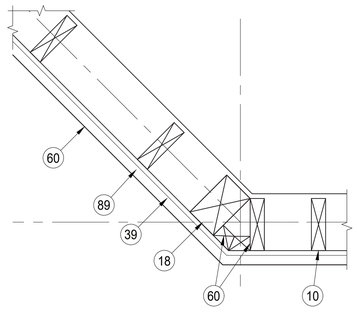


13 NOT USED

9 4x6 POST CORNER FRAMING — SCALE: 1 1/2" = 1'-0"

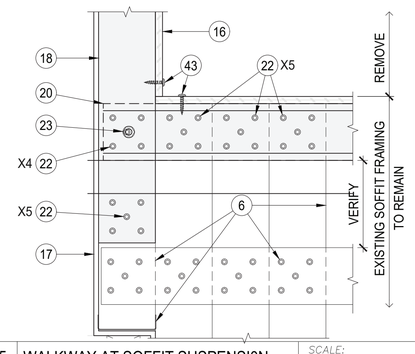


5 WALKWAY AT SOFFIT SUSPENSI0N — SCALE: 1 1/2" = 1'-0"

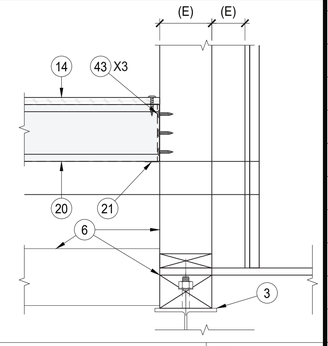


1 WALKWAY TO STUDS — SCALE: 1 1/2" = 1'-0"

## KEY NOTES

| | | | |
|---|---|---|---|
| 46 | 2"Ø ACCESS HOLE | MARK | DESCRIPTION |
| 47 | 3/8" FRP SPACER | 1 | (E) METAL FRAMED SOFFIT/ROTUNDA |
| 48 | 5/16"Ø HOLE | 2 | (E) INTERIOR ATRIUM SPACE AT SECOND FLOOR |
| 49 | 2 WRAP FRP BOND | 3 | (E) W12x26 FRAMING |
| 50 | FRP SHEATHING/PANEL SEAM | 4 | (E) HSS 5x5x1/4" COLUMN BELOW |
| 51 | BUILT UP FRP SCREEN PANEL | 5 | (E) 2x12 JOISTS @ 24" O.C. |
| 52 | 3/8" CARBONCORE HONEYCOMB SKIN | 6 | (E) FRAMING TO REMAIN |
| 53 | FRP C5 1/2"x 1 1/2"x 1/4" (PLATE) | 7 | TEMPORARY SHORING 2x6 STUDS @ 16" O.C & 2x6 PLATES. |
| 54 | FRP ∠4x4x5/16" x 4" LONG CLIP ANGLE | 8 | 4x10 DF |
| 55 | FRP C5 1/2"x 1 1/2"x 1/4" (STUD) | 9 | 2x10 DF @ 16" O.C. |
| 56 | NOT USED | 10 | 2x6 DF STUDS @ 16" O.C. |
| 57 | 5/8" FIBREBOLT | 11 | (2) 2x6 HEADER @ VENT OPENINGS |
| 58 | FRP ∠4x4x5/16" | 12 | 2x6 BLOCKING |
| 59 | FRP 3 1/2" x 5 1/2" x 1/4" TUBE POST AT TRUSS BEARING | 13 | (2) 2x6 PLATE |
| 60 | EFIS FINISH TO MATCH EXISTING | 14 | 3/4" PLYWOOD CAT WALK SHEATHING |
| 61 | 5/8" FIBREBOLT | 15 | 3/4" PLYWOOD ROOF SHEATHING |
| 62 | FRP ∠4x4x5/16" | 16 | 3/4" PLYWOOD WALL SHEATHING AT EQUIPMENT MOUNTING LOCATION |
| 63 | 11/16"Ø HOLE | 17 | FINISH INTERIOR TO MATCH EXISTING |
| 64 | CLOSED CELL EXPANSIVE FOAM, FILL AND TRIM FLUSH | 18 | 4x6 POST AT TRUSS BEARING |
| 65 | GUSSET PLATE GP1 | 19 | 600S162-54 (6" 16 GA STUD) |
| 66 | GUSSET PLATE GP2 | 20 | 600S162-54 (6" 16 GA JOIST) |
| 67 | GUSSET PLATE GP3 | 21 | 600T250-97 (6" 16 GA TRACK) |
| 68 | 3/8" FRP PLATE | 22 | 1/4"x 1" TEK SCREW |
| 69 | 11/16"Ø HOLE FIELD DRILL | 23 | 5/8"Ø A325 BOLT IN 11/16" Ø HOLE |
| 70 | FRP 4" x 1/4" SQ TUBE | 24 | ∠6x4x 3/8" |
| 71 | FRP ∠3x3x1/4" | 25 | ANTENNA/EQUIPMENT BY OTHERS |
| 72 | 5/8"Ø ALL-THREAD THRU-BOLT | 26 | Ø2.375" O.D. SCH 40 PIPE |
| 73 | 2x10 DF BACKER PLANK | 27 | 3/8"Ø U-BOLT BOLT |
| 74 | 1/2" NEOPRENE PAD | 28 | 3/8" A36 PLATE |
| 75 | NOT USED | 29 | SKYLIGHT BY OTHERS |
| 76 | (E) T.S. 3x3x1/4" @ 48" O.C | 30 | 22 GA STANDING SEAM ROOFING TO MATCH EXISTING |
| 77 | (E) PARAPET | 31 | 22 GA HIP COVER TO MATCH EXISTING |
| 78 | (E) SCREEN WALL | 32 | SIMPSON LSSR210Z SLOPED SKEWED HANGER |
| 79 | (E) ROOF | 33 | SIMPSON H1 HURRICANE TIE |
| 80 | 5/8"Ø A307 BOLT | 34 | SIMPSON A34 FRAMING ANGLE |
| 81 | 1/2" A36 PLATE | 35 | SIMPSON HU210 (SLOPED) |
| 82 | SIMPSON H2.5A | 36 | PLACE STUDS AS JOISTS OCCUR FOR SOFFIT SUSPENSION |
| 83 | 2x SOLID BLOCKING | 37 | SIMPSON ECC046 |
| 84 | (E) 4X PLATE/NAILER | 38 | SIMPSON ECC046 (MODIFIED) |
| 85 | (E) 3/4"Ø THREADED STUD @ 24" O.C. | 39 | 3/8" MIN STRUCTURAL SHEATHING AT EXTERIOR |
| 86 | SIMPSON H2.5A STUD-PLATE TIE @ 48" O.C. MAX. & AS SHOWN | 40 | VENT PER OWNER |
| 87 | SIMPSON RSP4 STUD-PLATE TIE, TYP AS SHOWN | 41 | 600S162-54 (6" 16 GA STUD) BRIDGING AT TOP OF WALL |
| 88 | 4X12 DF RIDGE BEAM | 42 | SIMPSON H2.5A HURRICANE TIE |
| 89 | 8d NAIL AT 12" O.C. FIELD 6" O.C. ALL SUPPORTED EDGES | 43 | #10 x 1 1/4" SCREW @ 6" O.C. ALL SUPPORTED EDGES & 12" O.C. FIELD |
| 90 | 16d NAIL @ 18" O.C. ALTERNATE LOCATIONS | 44 | DB 2x6 LAMINATED (GLUED) D.F. BEAM @ FRP "WINDOW" |
| 91 | SIMPSON CBT8200 WAFER HEAD SCREW OR EQUAL | 45 | 2x SUB FACIA |


at&t

LARSON
A valmont COMPANY
1501 South Euclid Avenue Tucson, AZ 85713
(520) 294-3900
www.valmontlarson.com

LARSON JOB #: A545094

ISE Incorporated
Structural Engineers
P.O. BOX 50039
Phoenix, Arizona 85076
PHONE: 602-403-8614
www.ise-inc.biz

ISE JOB #: 17887


# KIRKWOOD PLAZA SHOPPING CENTER ROOFTOP ANTENNA ENCLOSURE
## at&t NO: CCL01280
## FRAMING DETAILS

1630 W. CAMPBELL AVE, CAMPBELL, CA 95008
LARAMIE COUNTY, LAT: 37° 17' 6.27" N, LONG: -121° 58' 47.2836" W


THIS DESIGN DRAWING IS PROPRIETARY & CONFIDENTIAL
THE INFORMATION IN THIS DRAWING IS THE SOLE PROPERTY OF LARSON. ANY REPRODUCTION, MODIFICATION, OR MANUFACTURING IN PART, OR AS A WHOLE, WITHOUT THE WRITTEN PERMISSION OF LARSON IS PROHIBITED.


REGISTERED PROFESSIONAL ENGINEER
GARY L. HUNTER
NO. 67146
Aug 10, 2022
CIVIL
STATE OF CALIFORNIA

PROGRESS LOG

| | | | |
|---|---|---|---|
| 0 | 08/09/22 | ISSUED TO CLIENT | CK |
| A | 06/22/22 | ISSUED FOR REVIEW | CK |

SHEET NUMBER: S3.0

PROGRESS: 0

DRAWING DATE: August 10, 2022

NOTE: ROOFING DESIGN AND WATERPROOFING BY OTHERS, WATERPROOFING TO BE THE CONTRACTOR/INSTALLER'S RESPONSIBILITY ON NEW AND AJOINING CONSTRUCTION.

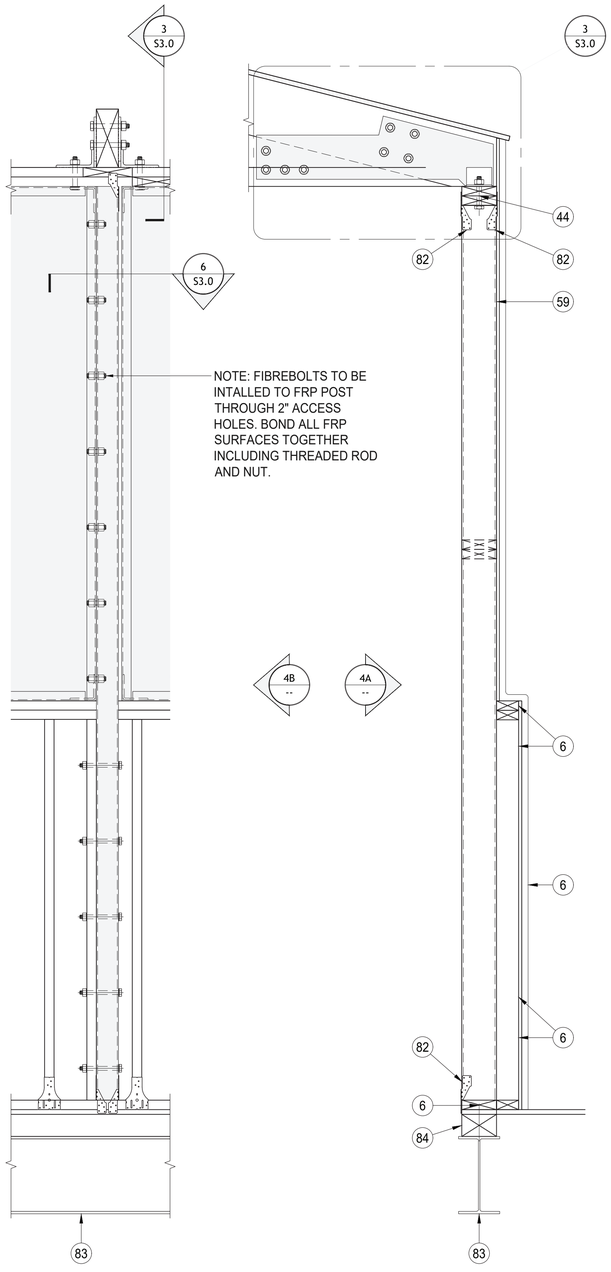


4A FRP POST ELEVATION

4B SECTION @ FRP POST

4 FRP POST — SCALE: 1" = 1'-0"

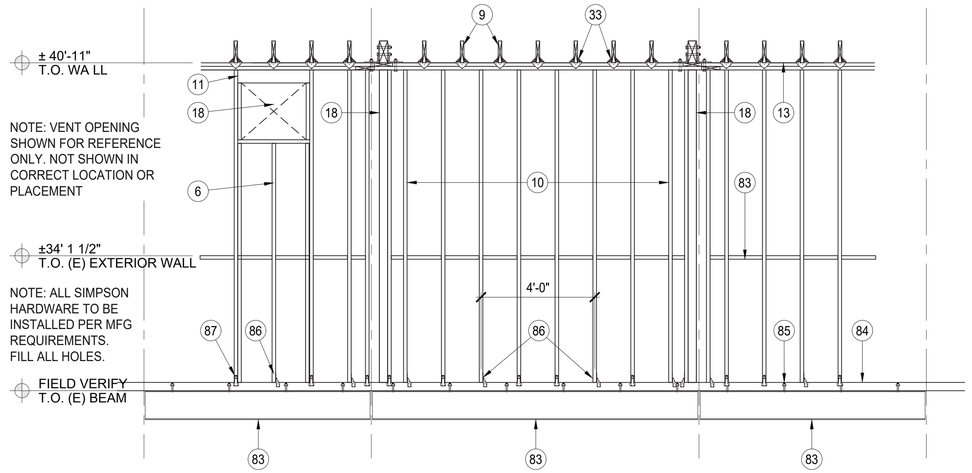


3 2X WALL FRAMING - TRUSS SUPPORT — NOTE: WALL DEPICTION THAT OF FLAT UNFOLDED SECTION OF WALL — SCALE: 3/8" = 1'-0"

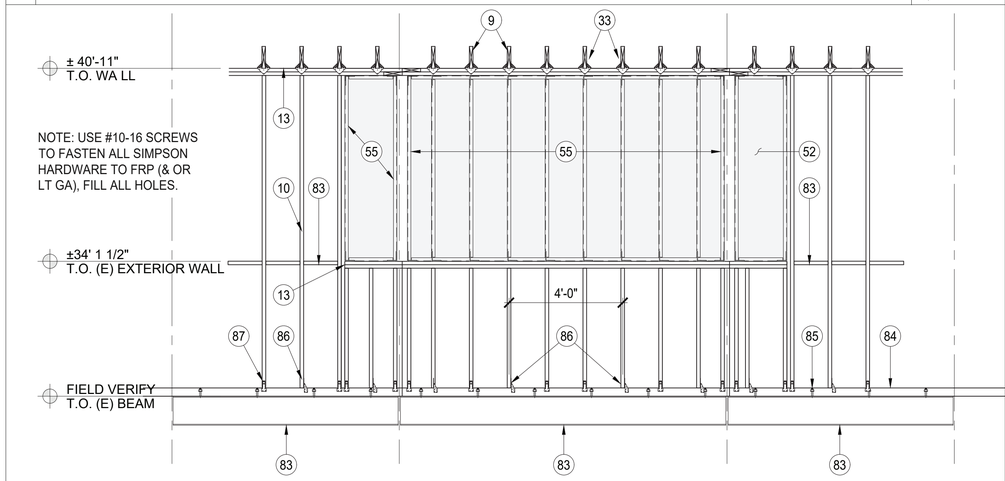


2 WALL FRAMING SECTOR 'C' — NOTE: WALL DEPICTION THAT OF FLAT UNFOLDED SECTION OF WALL — SCALE: 3/8" = 1'-0"

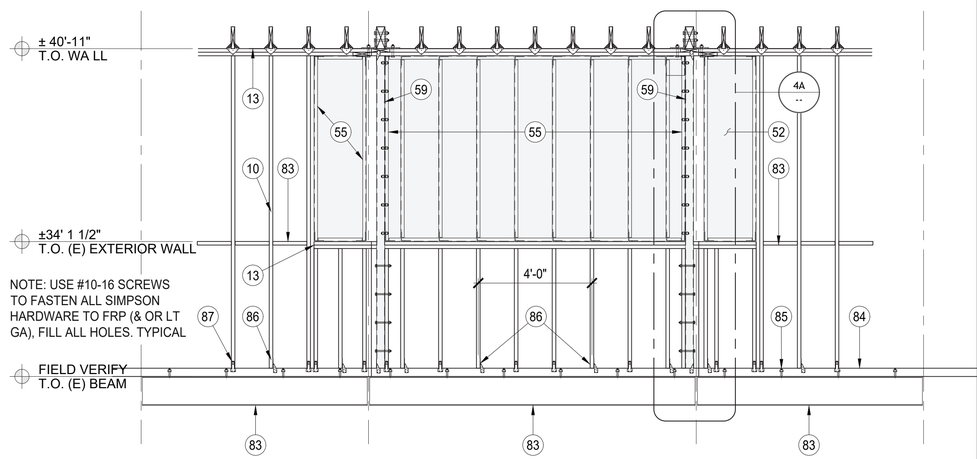


1 WALL FRAMING SECTOR A — NOTE: WALL DEPICTION THAT OF FLAT UNFOLDED SECTION OF WALL — SCALE: 3/8" = 1'-0"

## KEY NOTES

| | | | |
|---|---|---|---|
| 46 | 2"Ø ACCESS HOLE | MARK | DESCRIPTION |
| 47 | 3/8" FRP SPACER | 1 | (E) METAL FRAMED SOFFIT/ROTUNDA |
| 48 | 5/16"Ø HOLE | 2 | (E) INTERIOR ATRIUM SPACE AT SECOND FLOOR |
| 49 | 2 WRAP FRP BOND | 3 | (E) W12x26 FRAMING |
| 50 | FRP SHEATHING/PANEL SEAM | 4 | (E) HSS 5x5x1/4" COLUMN BELOW |
| 51 | BUILT UP FRP SCREEN PANEL | 5 | (E) 2x12 JOISTS @ 24" O.C. |
| 52 | 3/8" CARBONCORE HONEYCOMB SKIN | 6 | (E) FRAMING TO REMAIN |
| 53 | FRP C5 1/2"x 1 1/2"x 1/4" (PLATE) | 7 | TEMPORARY SHORING 2x6 STUDS @ 16" O.C & 2x6 PLATES. |
| 54 | FRP ∠4x4x5/16" x 4" LONG CLIP ANGLE | 8 | 4x10 DF |
| 55 | FRP C5 1/2"x 1 1/2"x 1/4" (STUD) | 9 | 2x10 DF @ 16" O.C. |
| 56 | NOT USED | 10 | 2x6 DF STUDS @ 16" O.C. |
| 57 | 5/8" FIBREBOLT | 11 | (2) 2x6 HEADER @ VENT OPENINGS |
| 58 | FRP ∠4x4x5/16" | 12 | 2x6 BLOCKING |
| 59 | FRP 3 1/2" x 5 1/2" x 1/4" TUBE POST AT TRUSS BEARING | 13 | (2) 2x6 PLATE |
| 60 | EFIS FINISH TO MATCH EXISTING | 14 | 3/4" PLYWOOD CAT WALK SHEATHING |
| 61 | 5/8" FIBREBOLT | 15 | 3/4" PLYWOOD ROOF SHEATHING |
| 62 | FRP ∠4x4x5/16" | 16 | 3/4" PLYWOOD WALL SHEATHING AT EQUIPMENT MOUNTING LOCATION |
| 63 | 11/16"Ø HOLE | 17 | FINISH INTERIOR TO MATCH EXISTING |
| 64 | CLOSED CELL EXPANSIVE FOAM, FILL AND TRIM FLUSH | 18 | 4x6 POST AT TRUSS BEARING |
| 65 | GUSSET PLATE GP1 | 19 | 600S162-54 (6" 16 GA STUD) |
| 66 | GUSSET PLATE GP2 | 20 | 600S162-54 (6" 16 GA JOIST) |
| 67 | GUSSET PLATE GP3 | 21 | 600T250-97 (6" 16 GA TRACK) |
| 68 | 3/8" FRP PLATE | 22 | 1/4"x 1" TEK SCREW |
| 69 | 11/16"Ø HOLE FIELD DRILL | 23 | 5/8"Ø A325 BOLT IN 11/16" Ø HOLE |
| 70 | FRP 4" x 1/4" SQ TUBE | 24 | ∠6x4x 3/8" |
| 71 | FRP ∠3x3x1/4" | 25 | ANTENNA/EQUIPMENT BY OTHERS |
| 72 | 5/8"Ø ALL-THREAD THRU-BOLT | 26 | Ø2.375" O.D. SCH 40 PIPE |
| 73 | 2x10 DF BACKER PLANK | 27 | 3/8"Ø U-BOLT BOLT |
| 74 | 1/2" NEOPRENE PAD | 28 | 3/8" A36 PLATE |
| 75 | NOT USED | 29 | SKYLIGHT BY OTHERS |
| 76 | (E) T.S. 3x3x1/4" @ 48" O.C | 30 | 22 GA STANDING SEAM ROOFING TO MATCH EXISTING |
| 77 | (E) PARAPET | 31 | 22 GA HIP COVER TO MATCH EXISTING |
| 78 | (E) SCREEN WALL | 32 | SIMPSON LSSR210Z SLOPED SKEWED HANGER |
| 79 | (E) ROOF | 33 | SIMPSON H1 HURRICANE TIE |
| 80 | 5/8"Ø A307 BOLT | 34 | SIMPSON A34 FRAMING ANGLE |
| 81 | 1/2" A36 PLATE | 35 | SIMPSON HU210 (SLOPED) |
| 82 | SIMPSON H2.5A | 36 | PLACE STUDS AS JOISTS OCCUR FOR SOFFIT SUSPENSION |
| 83 | 2x SOLID BLOCKING | 37 | SIMPSON ECC046 |
| 84 | (E) 4X PLATE/NAILER | 38 | SIMPSON ECC046 (MODIFIED) |
| 85 | (E) 3/4"Ø THREADED STUD @ 24" O.C. | 39 | 3/8" MIN STRUCTURAL SHEATHING AT EXTERIOR |
| 86 | SIMPSON H2.5A STUD-PLATE TIE @ 48" O.C. MAX. & AS SHOWN | 40 | VENT PER OWNER |
| 87 | SIMPSON RSP4 STUD-PLATE TIE, TYP AS SHOWN | 41 | 600S162-54 (6" 16 GA STUD) BRIDGING AT TOP OF WALL |
| 88 | 4X12 DF RIDGE BEAM | 42 | SIMPSON H2.5A HURRICANE TIE |
| 89 | 8d NAIL AT 12" O.C. FIELD 6" O.C. ALL SUPPORTED EDGES | 43 | #10 x 1 1/4" SCREW @ 6" O.C. ALL SUPPORTED EDGES & 12" O.C. FIELD |
| 90 | 16d NAIL @ 18" O.C. ALTERNATE LOCATIONS | 44 | DB 2x6 LAMINATED (GLUED) D.F. BEAM @ FRP "WINDOW" |
| 91 | SIMPSON CBT8200 WAFER HEAD SCREW OR EQUAL | 45 | 2x SUB FACIA |


at&t

LARSON
A valmont COMPANY
1501 South Euclid Avenue Tucson, AZ 85713
(520) 294-3900
www.valmontlarson.com
LARSON JOB #: A545094

ISE Incorporated
Structural Engineers
P.O. BOX 50039
Phoenix, Arizona 85076
PHONE: 602-403-8614
www.ise-inc.biz
ISE JOB #: 17887


# KIRKWOOD PLAZA SHOPPING CENTER ROOFTOP ANTENNA ENCLOSURE
## at&t NO: CCL01280
## WALL FRAMING ELEVATIONS AND SECTIONS

1630 W. CAMPBELL AVE, CAMPBELL, CA 95008
LARAMIE COUNTY, LAT: 37° 17' 6.27" N, LONG: -121° 58' 47.2836" W


THIS DESIGN DRAWING IS PROPRIETARY & CONFIDENTIAL
THE INFORMATION IN THIS DRAWING IS THE SOLE PROPERTY OF LARSON. ANY REPRODUCTION, MODIFICATION, OR MANUFACTURING IN PART, OR AS A WHOLE, WITHOUT THE WRITTEN PERMISSION OF LARSON IS PROHIBITED.


REGISTERED PROFESSIONAL ENGINEER — GLEN YOUNG — NO. 67146 — Aug 10, 2022 — CIVIL — STATE OF CALIFORNIA

PROGRESS LOG

| | | | |
|---|---|---|---|
| 0 | 08/09/22 | ISSUED TO CLIENT | CK |
| A | 06/22/22 | ISSUED FOR REVIEW | CK |

SHEET NUMBER: S4.0

PROGRESS: 0

DRAWING DATE: August 10, 2022

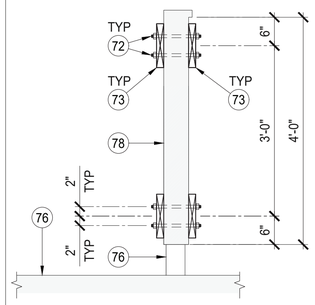


8 NOT USED

6 SECTION AT (E) SCREEN — SCALE: 3/4" = 1'-0"

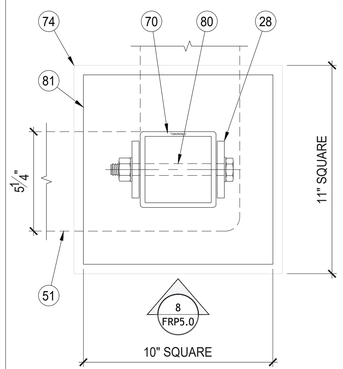


7 NOT USED

5 BASE PLATE DETAIL — SCALE: 1/4" = 1'-0"

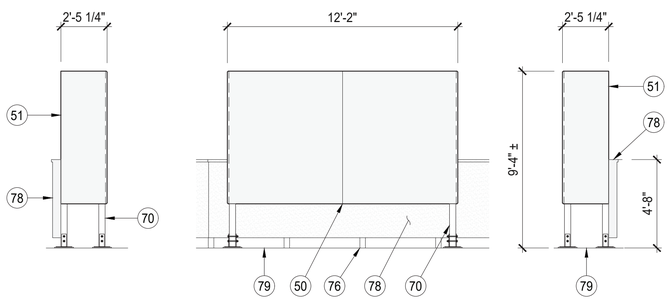


4 SECTOR B ELEVATIONS — SCALE: 1/4" = 1'-0"

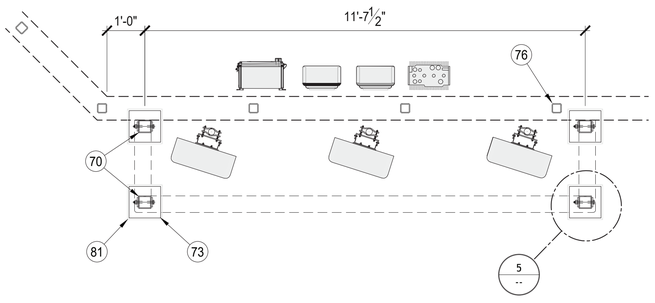


3 SECTOR B BASE PLATE LOCATION PLAN — SCALE: 1/2" = 1'-0"

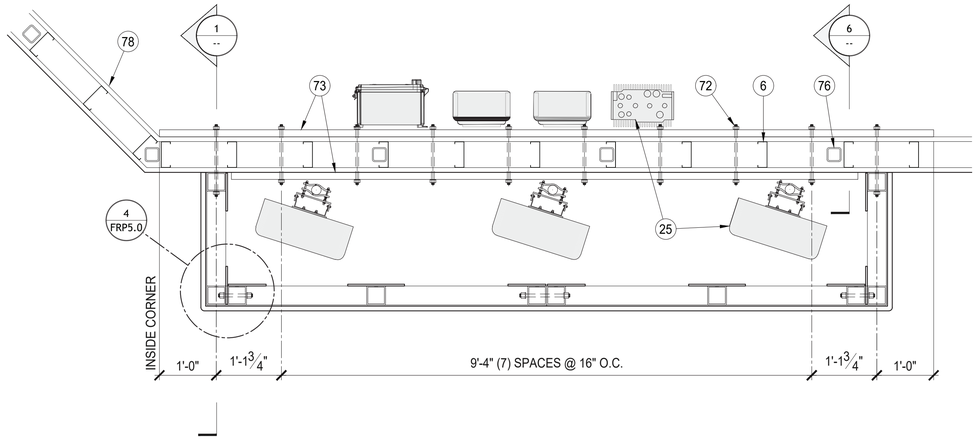


2 SECTOR B PLAN VIEW — SCALE: 3/4" = 1'-0"

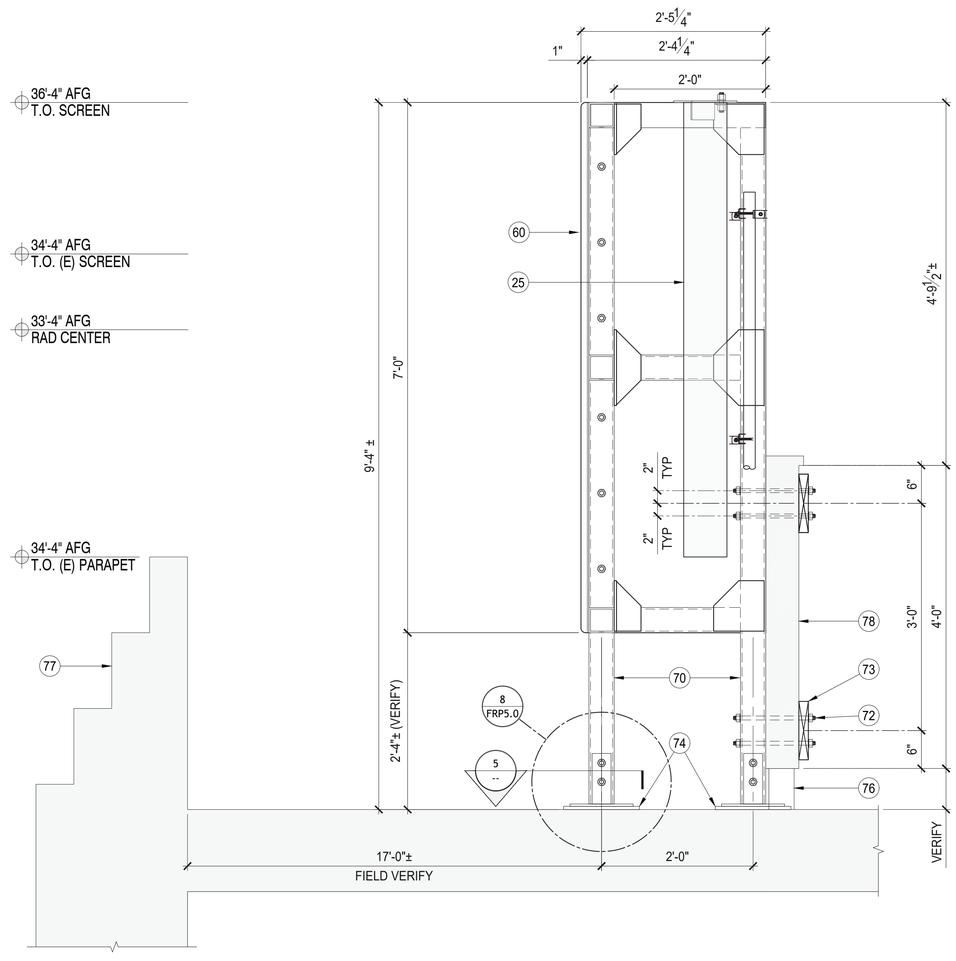


1 SECTOR B WALL SETCION — SCALE: 1" = 1'-0"

## KEY NOTES

| | | | |
|---|---|---|---|
| 46 | 2"Ø ACCESS HOLE | MARK | DESCRIPTION |
| 47 | 3/8" FRP SPACER | 1 | (E) METAL FRAMED SOFFIT/ROTUNDA |
| 48 | 5/16"Ø HOLE | 2 | (E) INTERIOR ATRIUM SPACE AT SECOND FLOOR |
| 49 | 2 WRAP FRP BOND | 3 | (E) W12x26 FRAMING |
| 50 | FRP SHEATHING/PANEL SEAM | 4 | (E) HSS 5x5x1/4" COLUMN BELOW |
| 51 | BUILT UP FRP SCREEN PANEL | 5 | (E) 2x12 JOISTS @ 24" O.C. |
| 52 | 3/8" CARBONCORE HONEYCOMB SKIN | 6 | (E) FRAMING TO REMAIN |
| 53 | FRP C5 1/2"x 1 1/2"x 1/4" (PLATE) | 7 | TEMPORARY SHORING 2x6 STUDS @ 16" O.C & 2x6 PLATES. |
| 54 | FRP ∠4x4x5/16" x 4" LONG CLIP ANGLE | 8 | 4x10 DF |
| 55 | FRP C5 1/2"x 1 1/2"x 1/4" (STUD) | 9 | 2x10 DF @ 16" O.C. |
| 56 | NOT USED | 10 | 2x6 DF STUDS @ 16" O.C. |
| 57 | 5/8" FIBREBOLT | 11 | (2) 2x6 HEADER @ VENT OPENINGS |
| 58 | FRP ∠4x4x5/16" | 12 | 2x6 BLOCKING |
| 59 | FRP 3 1/2" x 5 1/2" x 1/4" TUBE POST AT TRUSS BEARING | 13 | (2) 2x6 PLATE |
| 60 | EFIS FINISH TO MATCH EXISTING | 14 | 3/4" PLYWOOD CAT WALK SHEATHING |
| 61 | 5/8" FIBREBOLT | 15 | 3/4" PLYWOOD ROOF SHEATHING |
| 62 | FRP ∠4x4x5/16" | 16 | 3/4" PLYWOOD WALL SHEATHING AT EQUIPMENT MOUNTING LOCATION |
| 63 | 11/16"Ø HOLE | 17 | FINISH INTERIOR TO MATCH EXISTING |
| 64 | CLOSED CELL EXPANSIVE FOAM, FILL AND TRIM FLUSH | 18 | 4x6 POST AT TRUSS BEARING |
| 65 | GUSSET PLATE GP1 | 19 | 600S162-54 (6" 16 GA STUD) |
| 66 | GUSSET PLATE GP2 | 20 | 600S162-54 (6" 16 GA JOIST) |
| 67 | GUSSET PLATE GP3 | 21 | 600T250-97 (6" 16 GA TRACK) |
| 68 | 3/8" FRP PLATE | 22 | 1/4"x 1" TEK SCREW |
| 69 | 11/16"Ø HOLE FIELD DRILL | 23 | 5/8"Ø A325 BOLT IN 11/16" Ø HOLE |
| 70 | FRP 4" x 1/4" SQ TUBE | 24 | ∠6x4x 3/8" |
| 71 | FRP ∠3x3x1/4" | 25 | ANTENNA/EQUIPMENT BY OTHERS |
| 72 | 5/8"Ø ALL-THREAD THRU-BOLT | 26 | Ø2.375" O.D. SCH 40 PIPE |
| 73 | 2x10 DF BACKER PLANK | 27 | 3/8"Ø U-BOLT BOLT |
| 74 | 1/2" NEOPRENE PAD | 28 | 3/8" A36 PLATE |
| 75 | NOT USED | 29 | SKYLIGHT BY OTHERS |
| 76 | (E) T.S. 3x3x1/4" @ 48" O.C | 30 | 22 GA STANDING SEAM ROOFING TO MATCH EXISTING |
| 77 | (E) PARAPET | 31 | 22 GA HIP COVER TO MATCH EXISTING |
| 78 | (E) SCREEN WALL | 32 | SIMPSON LSSR210Z SLOPED SKEWED HANGER |
| 79 | (E) ROOF | 33 | SIMPSON H1 HURRICANE TIE |
| 80 | 5/8"Ø A307 BOLT | 34 | SIMPSON A34 FRAMING ANGLE |
| 81 | 1/2" A36 PLATE | 35 | SIMPSON HU210 (SLOPED) |
| 82 | SIMPSON H2.5A | 36 | PLACE STUDS AS JOISTS OCCUR FOR SOFFIT SUSPENSION |
| 83 | 2x SOLID BLOCKING | 37 | SIMPSON ECC046 |
| 84 | (E) 4X PLATE/NAILER | 38 | SIMPSON ECC046 (MODIFIED) |
| 85 | (E) 3/4"Ø THREADED STUD @ 24" O.C. | 39 | 3/8" MIN STRUCTURAL SHEATHING AT EXTERIOR |
| 86 | SIMPSON H2.5A STUD-PLATE TIE @ 48" O.C. MAX. & AS SHOWN | 40 | VENT PER OWNER |
| 87 | SIMPSON RSP4 STUD-PLATE TIE, TYP AS SHOWN | 41 | 600S162-54 (6" 16 GA STUD) BRIDGING AT TOP OF WALL |
| 88 | 4X12 DF RIDGE BEAM | 42 | SIMPSON H2.5A HURRICANE TIE |
| 89 | 8d NAIL AT 12" O.C. FIELD 6" O.C. ALL SUPPORTED EDGES | 43 | #10 x 1 1/4" SCREW @ 6" O.C. ALL SUPPORTED EDGES & 12" O.C. FIELD |
| 90 | 16d NAIL @ 18" O.C. ALTERNATE LOCATIONS | 44 | DB 2x6 LAMINATED (GLUED) D.F. BEAM @ FRP "WINDOW" |
| 91 | SIMPSON CBT8200 WAFER HEAD SCREW OR EQUAL | 45 | 2x SUB FACIA |


at&t

LARSON
A valmont COMPANY
1501 South Euclid Avenue Tucson, AZ 85713
(520) 294-3900
www.valmontlarson.com

LARSON JOB #: A545094

ISE Incorporated
Structural Engineers
P.O. BOX 50039
Phoenix, Arizona 85076
PHONE: 602-403-8614
www.ise-inc.biz

ISE JOB #: 17887


# KIRKWOOD PLAZA SHOPPING CENTER ROOFTOP ANTENNA ENCLOSURE
## at&t NO: CCL01280
## SECTOR "B" PLAN AND DETAILS

1630 W. CAMPBELL AVE, CAMPBELL, CA 95008
LARAMIE COUNTY, LAT: 37° 17' 6.27" N, LONG: -121° 58' 47.2836" W


THIS DESIGN DRAWING IS PROPRIETARY & CONFIDENTIAL
THE INFORMATION IN THIS DRAWING IS THE SOLE PROPERTY OF LARSON. ANY REPRODUCTION, MODIFICATION, OR MANUFACTURING IN PART, OR AS A WHOLE, WITHOUT THE WRITTEN PERMISSION OF LARSON IS PROHIBITED.


REGISTERED PROFESSIONAL ENGINEER
GARY YOUNG
NO. 67146
Aug 10, 2022
CIVIL
STATE OF CALIFORNIA

PROGRESS LOG

| | | | |
|---|---|---|---|
| 0 | 08/09/22 | ISSUED TO CLIENT | CK |
| A | 06/22/22 | ISSUED FOR REVIEW | CK |

SHEET NUMBER: S5.0

PROGRESS: 0

DRAWING DATE: August 10, 2022

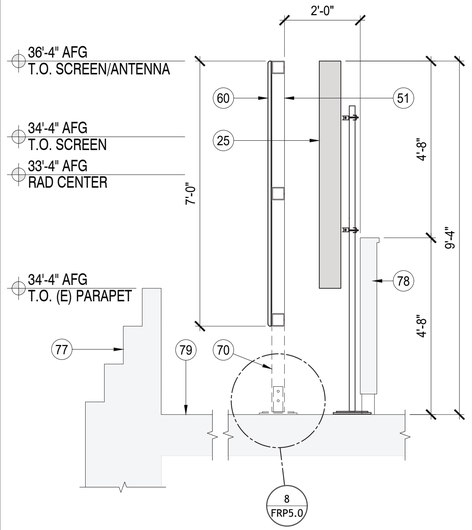


10 SECTOR B SECTION

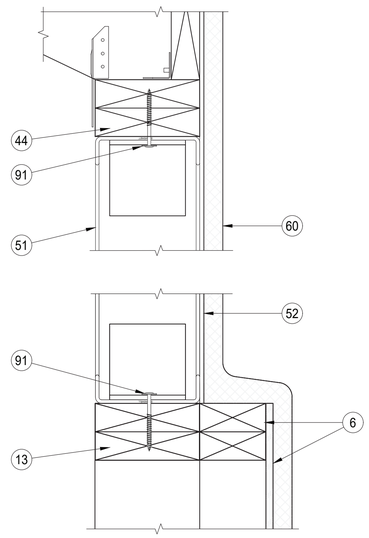


7 FRP PANEL IN PLACE — SCALE: 3/8" = 1'-0"

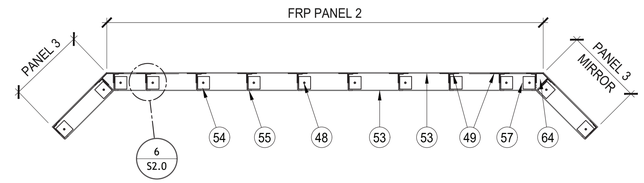


4 FRP PANEL PLAN SECTOR C — SCALE: 3/8" = 1'-0"

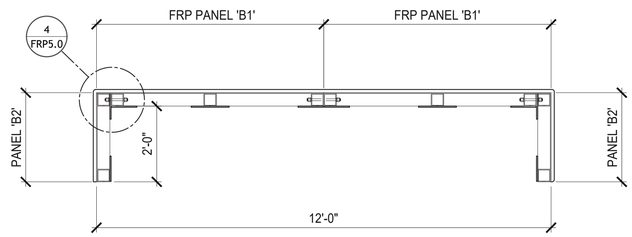


3 FRP PANEL PLAN SECTOR B — SCALE: 3/8" = 1'-0"

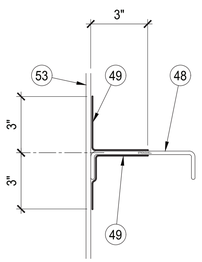


9 TOP PLATE BOND TO SKIN

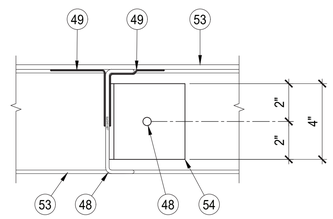


NOTE: BOND ALL FRP SURFACES TOGETHER PER NOTES ON SHEET GSN

6 TYPICAL STUD TO PLATE DETAIL — SCALE: 3/8" = 1'-0"

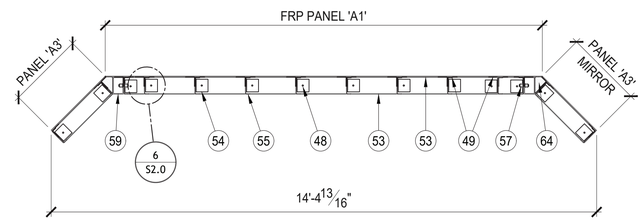


2 FRP PANEL PLAN SECTOR A — SCALE: 3/8" = 1'-0"

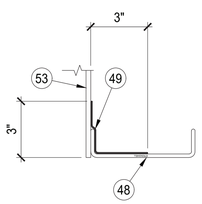


8 BOTTOM PLATE BOND TO SKIN

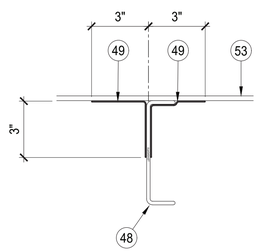


5 DETAIL — SCALE: 1" = 1'-0"

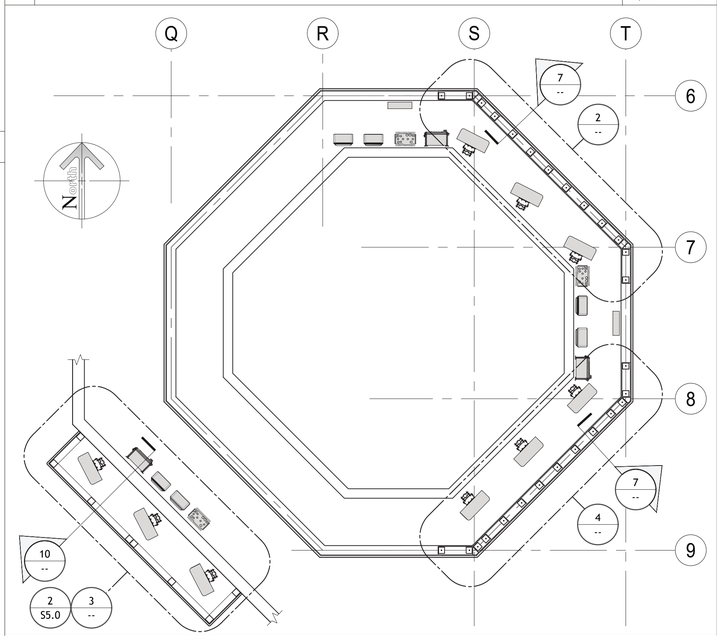


1 WALL FRAMING SECTOR A

## KEY NOTES

| | | | |
|---|---|---|---|
| 46 | 2"Ø ACCESS HOLE | MARK | DESCRIPTION |
| 47 | 3/8" FRP SPACER | 1 | (E) METAL FRAMED SOFFIT/ROTUNDA |
| 48 | 5/16"Ø HOLE | 2 | (E) INTERIOR ATRIUM SPACE AT SECOND FLOOR |
| 49 | 2 WRAP FRP BOND | 3 | (E) W12x26 FRAMING |
| 50 | FRP SHEATHING/PANEL SEAM | 4 | (E) HSS 5x5x1/4" COLUMN BELOW |
| 51 | BUILT UP FRP SCREEN PANEL | 5 | (E) 2x12 JOISTS @ 24" O.C. |
| 52 | 3/8" CARBONCORE HONEYCOMB SKIN | 6 | (E) FRAMING TO REMAIN |
| 53 | FRP C5 1/2"x 1 1/2"x 1/4" (PLATE) | 7 | TEMPORARY SHORING 2x6 STUDS @ 16" O.C & 2x6 PLATES. |
| 54 | FRP ∠4x4x5/16" x 4" LONG CLIP ANGLE | 8 | 4x10 DF |
| 55 | FRP C5 1/2"x 1 1/2"x 1/4" (STUD) | 9 | 2x10 DF @ 16" O.C. |
| 56 | NOT USED | 10 | 2x6 DF STUDS @ 16" O.C. |
| 57 | 5/8" FIBREBOLT | 11 | (2) 2x6 HEADER @ VENT OPENINGS |
| 58 | FRP ∠4x4x5/16" | 12 | 2x6 BLOCKING |
| 59 | FRP 3 1/2" x 5 1/2" x 1/4" TUBE POST AT TRUSS BEARING | 13 | (2) 2x6 PLATE |
| 60 | EFIS FINISH TO MATCH EXISTING | 14 | 3/4" PLYWOOD CAT WALK SHEATHING |
| 61 | 5/8" FIBREBOLT | 15 | 3/4" PLYWOOD ROOF SHEATHING |
| 62 | FRP ∠4x4x5/16" | 16 | 3/4" PLYWOOD WALL SHEATHING AT EQUIPMENT MOUNTING LOCATION |
| 63 | 11/16"Ø HOLE | 17 | FINISH INTERIOR TO MATCH EXISTING |
| 64 | CLOSED CELL EXPANSIVE FOAM, FILL AND TRIM FLUSH | 18 | 4x6 POST AT TRUSS BEARING |
| 65 | GUSSET PLATE GP1 | 19 | 600S162-54 (6" 16 GA STUD) |
| 66 | GUSSET PLATE GP2 | 20 | 600S162-54 (6" 16 GA JOIST) |
| 67 | GUSSET PLATE GP3 | 21 | 600T250-97 (6" 16 GA TRACK) |
| 68 | 3/8" FRP PLATE | 22 | 1/4"x 1" TEK SCREW |
| 69 | 11/16"Ø HOLE FIELD DRILL | 23 | 5/8"Ø A325 BOLT IN 11/16" Ø HOLE |
| 70 | FRP 4" x 1/4" SQ TUBE | 24 | ∠6x4x 3/8" |
| 71 | FRP ∠3x3x1/4" | 25 | ANTENNA/EQUIPMENT BY OTHERS |
| 72 | 5/8"Ø ALL-THREAD THRU-BOLT | 26 | Ø2.375" O.D. SCH 40 PIPE |
| 73 | 2x10 DF BACKER PLANK | 27 | 3/8"Ø U-BOLT BOLT |
| 74 | 1/2" NEOPRENE PAD | 28 | 3/8" A36 PLATE |
| 75 | NOT USED | 29 | SKYLIGHT BY OTHERS |
| 76 | (E) T.S. 3x3x1/4" @ 48" O.C | 30 | 22 GA STANDING SEAM ROOFING TO MATCH EXISTING |
| 77 | (E) PARAPET | 31 | 22 GA HIP COVER TO MATCH EXISTING |
| 78 | (E) SCREEN WALL | 32 | SIMPSON LSSR210Z SLOPED SKEWED HANGER |
| 79 | (E) ROOF | 33 | SIMPSON H1 HURRICANE TIE |
| 80 | 5/8"Ø A307 BOLT | 34 | SIMPSON A34 FRAMING ANGLE |
| 81 | 1/2" A36 PLATE | 35 | SIMPSON HU210 (SLOPED) |
| 82 | SIMPSON H2.5A | 36 | PLACE STUDS AS JOISTS OCCUR FOR SOFFIT SUSPENSION |
| 83 | 2x SOLID BLOCKING | 37 | SIMPSON ECC046 |
| 84 | (E) 4X PLATE/NAILER | 38 | SIMPSON ECC046 (MODIFIED) |
| 85 | (E) 3/4"Ø THREADED STUD @ 24" O.C. | 39 | 3/8" MIN STRUCTURAL SHEATHING AT EXTERIOR |
| 86 | SIMPSON H2.5A STUD-PLATE TIE @ 48" O.C. MAX. & AS SHOWN | 40 | VENT PER OWNER |
| 87 | SIMPSON RSP4 STUD-PLATE TIE, TYP AS SHOWN | 41 | 600S162-54 (6" 16 GA STUD) BRIDGING AT TOP OF WALL |
| 88 | 4X12 DF RIDGE BEAM | 42 | SIMPSON H2.5A HURRICANE TIE |
| 89 | 8d NAIL AT 12" O.C. FIELD 6" O.C. ALL SUPPORTED EDGES | 43 | #10 x 1 1/4" SCREW @ 6" O.C. ALL SUPPORTED EDGES & 12" O.C. FIELD |
| 90 | 16d NAIL @ 18" O.C. ALTERNATE LOCATIONS | 44 | DB 2x6 LAMINATED (GLUED) D.F. BEAM @ FRP "WINDOW" |
| 91 | SIMPSON CBT8200 WAFER HEAD SCREW OR EQUAL | 45 | 2x SUB FACIA |

at&t


LARSON
A valmont COMPANY
1501 South Euclid Avenue Tucson, AZ 85713
(520) 294-3900
www.valmontlarson.com
LARSON JOB #: A545094

ISE Incorporated
Structural Engineers
P.O. BOX 50039
Phoenix, Arizona 85076
PHONE: 602-403-8614
www.ise-inc.biz
ISE JOB #: 17887


# KIRKWOOD PLAZA SHOPPING CENTER ROOFTOP ANTENNA ENCLOSURE
## at&t NO: CCL01280
## FRP SCREEN WALL PLANS

1630 W. CAMPBELL AVE, CAMPBELL, CA 95008
LARAMIE COUNTY, LAT: 37° 17' 6.27" N, LONG: -121° 58' 47.2836" W


THIS DESIGN DRAWING IS PROPRIETARY & CONFIDENTIAL
THE INFORMATION IN THIS DRAWING IS THE SOLE PROPERTY OF LARSON. ANY REPRODUCTION, MODIFICATION, OR MANUFACTURING IN PART, OR AS A WHOLE, WITHOUT THE WRITTEN PERMISSION OF LARSON IS PROHIBITED.


REGISTERED PROFESSIONAL ENGINEER
GARY L. HUNTER
NO. 67146
Aug 10, 2022
CIVIL
STATE OF CALIFORNIA

PROGRESS LOG

| | | | |
|---|---|---|---|
| 0 | 08/09/22 | ISSUED TO CLIENT | CK |
| A | 06/22/22 | ISSUED FOR REVIEW | CK |

SHEET NUMBER: FRP1.0
PROGRESS: 0
DRAWING DATE: August 10, 2022

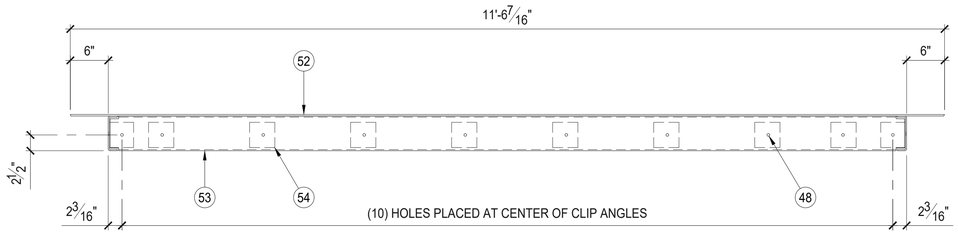


TOP VIEW 'A1D'

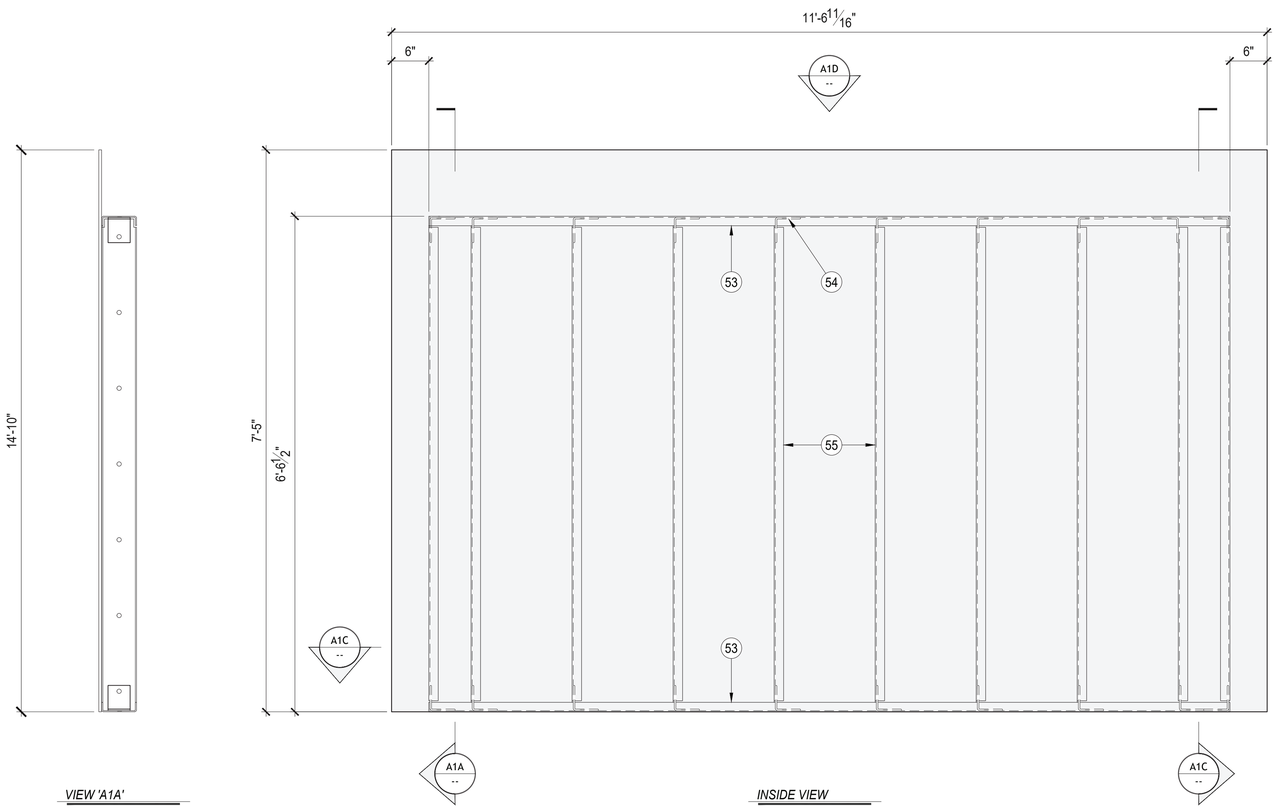


VIEW 'A1A'

INSIDE VIEW

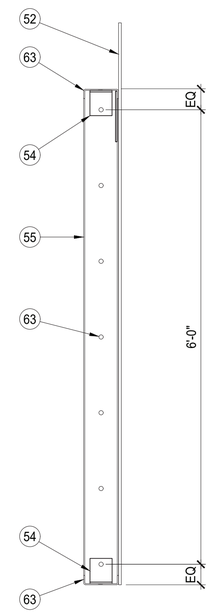


VIEW 'A1B'

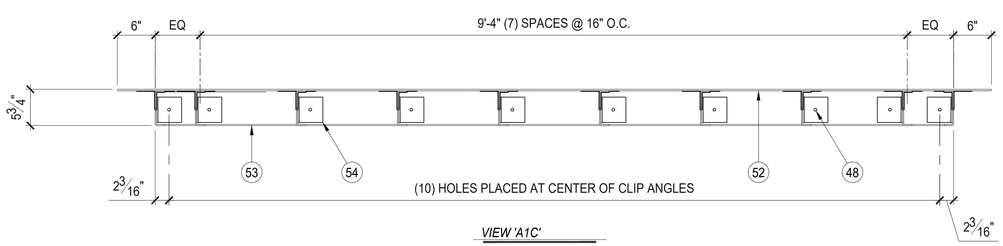


VIEW 'A1C'

(2) THUS

1 FRP PANEL 'A1'

SCALE: 1" = 1'-0"

## KEY NOTES

| | | | |
|---|---|---|---|
| 46 | 2"Ø ACCESS HOLE | MARK | DESCRIPTION |
| 47 | 3/8" FRP SPACER | 1 | (E) METAL FRAMED SOFFIT/ROTUNDA |
| 48 | 5/16"Ø HOLE | 2 | (E) INTERIOR ATRIUM SPACE AT SECOND FLOOR |
| 49 | 2 WRAP FRP BOND | 3 | (E) W12x26 FRAMING |
| 50 | FRP SHEATHING/PANEL SEAM | 4 | (E) HSS 5x5x1/4" COLUMN BELOW |
| 51 | BUILT UP FRP SCREEN PANEL | 5 | (E) 2x12 JOISTS @ 24" O.C. |
| 52 | 3/8" CARBONCORE HONEYCOMB SKIN | 6 | (E) FRAMING TO REMAIN |
| 53 | FRP C5 1/2"x 1 1/2"x 1/4" (PLATE) | 7 | TEMPORARY SHORING 2x6 STUDS @ 16" O.C & 2x6 PLATES. |
| 54 | FRP ∠4x4x5/16" x 4" LONG CLIP ANGLE | 8 | 4x10 DF |
| 55 | FRP C5 1/2"x 1 1/2"x 1/4" (STUD) | 9 | 2x10 DF @ 16" O.C. |
| 56 | NOT USED | 10 | 2x6 DF STUDS @ 16" O.C. |
| 57 | 5/8" FIBREBOLT | 11 | (2) 2x6 HEADER @ VENT OPENINGS |
| 58 | FRP ∠4x4x5/16" | 12 | 2x6 BLOCKING |
| 59 | FRP 3 1/2" x 5 1/2" x 1/4" TUBE POST AT TRUSS BEARING | 13 | (2) 2x6 PLATE |
| 60 | EFIS FINISH TO MATCH EXISTING | 14 | 3/4" PLYWOOD CAT WALK SHEATHING |
| 61 | 5/8" FIBREBOLT | 15 | 3/4" PLYWOOD ROOF SHEATHING |
| 62 | FRP ∠4x4x5/16" | 16 | 3/4" PLYWOOD WALL SHEATHING AT EQUIPMENT MOUNTING LOCATION |
| 63 | 11/16"Ø HOLE | 17 | FINISH INTERIOR TO MATCH EXISTING |
| 64 | CLOSED CELL EXPANSIVE FOAM, FILL AND TRIM FLUSH | 18 | 4x6 POST AT TRUSS BEARING |
| 65 | GUSSET PLATE GP1 | 19 | 600S162-54 (6" 16 GA STUD) |
| 66 | GUSSET PLATE GP2 | 20 | 600S162-54 (6" 16 GA JOIST) |
| 67 | GUSSET PLATE GP3 | 21 | 600T250-97 (6" 16 GA TRACK) |
| 68 | 3/8" FRP PLATE | 22 | 1/4"x 1" TEK SCREW |
| 69 | 11/16"Ø HOLE FIELD DRILL | 23 | 5/8"Ø A325 BOLT IN 11/16" Ø HOLE |
| 70 | FRP 4" x 1/4" SQ TUBE | 24 | ∠6x4x 3/8" |
| 71 | FRP ∠3x3x1/4" | 25 | ANTENNA/EQUIPMENT BY OTHERS |
| 72 | 5/8"Ø ALL-THREAD THRU-BOLT | 26 | Ø2.375" O.D. SCH 40 PIPE |
| 73 | 2x10 DF BACKER PLANK | 27 | 3/8"Ø U-BOLT BOLT |
| 74 | 1/2" NEOPRENE PAD | 28 | 3/8" A36 PLATE |
| 75 | NOT USED | 29 | SKYLIGHT BY OTHERS |
| 76 | (E) T.S. 3x3x1/4" @ 48" O.C | 30 | 22 GA STANDING SEAM ROOFING TO MATCH EXISTING |
| 77 | (E) PARAPET | 31 | 22 GA HIP COVER TO MATCH EXISTING |
| 78 | (E) SCREEN WALL | 32 | SIMPSON LSSR210Z SLOPED SKEWED HANGER |
| 79 | (E) ROOF | 33 | SIMPSON H1 HURRICANE TIE |
| 80 | 5/8"Ø A307 BOLT | 34 | SIMPSON A34 FRAMING ANGLE |
| 81 | 1/2" A36 PLATE | 35 | SIMPSON HU210 (SLOPED) |
| 82 | SIMPSON H2.5A | 36 | PLACE STUDS AS JOISTS OCCUR FOR SOFFIT SUSPENSION |
| 83 | 2x SOLID BLOCKING | 37 | SIMPSON ECC046 |
| 84 | (E) 4X PLATE/NAILER | 38 | SIMPSON ECC046 (MODIFIED) |
| 85 | (E) 3/4"Ø THREADED STUD @ 24" O.C. | 39 | 3/8" MIN STRUCTURAL SHEATHING AT EXTERIOR |
| 86 | SIMPSON H2.5A STUD-PLATE TIE @ 48" O.C. MAX. & AS SHOWN | 40 | VENT PER OWNER |
| 87 | SIMPSON RSP4 STUD-PLATE TIE, TYP AS SHOWN | 41 | 600S162-54 (6" 16 GA STUD) BRIDGING AT TOP OF WALL |
| 88 | 4X12 DF RIDGE BEAM | 42 | SIMPSON H2.5A HURRICANE TIE |
| 89 | 8d NAIL AT 12" O.C. FIELD 6" O.C. ALL SUPPORTED EDGES | 43 | #10 x 1 1/4" SCREW @ 6" O.C. ALL SUPPORTED EDGES & 12" O.C. FIELD |
| 90 | 16d NAIL @ 18" O.C. ALTERNATE LOCATIONS | 44 | DB 2x6 LAMINATED (GLUED) D.F. BEAM @ FRP "WINDOW" |
| 91 | SIMPSON CBT8200 WAFER HEAD SCREW OR EQUAL | 45 | 2x SUB FACIA |

at&t

LARSON
A valmont COMPANY
1501 South Euclid Avenue Tucson, AZ 85713
(520) 294-3900
www.valmontlarson.com

LARSON JOB #: A545094

ISE Incorporated
Structural Engineers
P.O. BOX 50039
Phoenix, Arizona 85076
PHONE: 602-403-8614
www.ise-inc.biz

ISE JOB #: 17887

# KIRKWOOD PLAZA SHOPPING CENTER ROOFTOP ANTENNA ENCLOSURE at&t NO: CCL01280

## FRP PANEL 'A1' & DETAILS

1630 W. CAMPBELL AVE, CAMPBELL, CA 95008
LARAMIE COUNTY, LAT: 37° 17' 6.27" N, LONG: -121° 58' 47.2836" W


THIS DESIGN DRAWING IS PROPRIETARY & CONFIDENTIAL
THE INFORMATION IN THIS DRAWING IS THE SOLE PROPERTY OF LARSON. ANY REPRODUCTION, MODIFICATION, OR MANUFACTURING IN PART, OR AS A WHOLE, WITHOUT THE WRITTEN PERMISSION OF LARSON IS PROHIBITED.


REGISTERED PROFESSIONAL ENGINEER
GLEN C. YUNTA
NO. 67146
Aug 10, 2022
CIVIL
STATE OF CALIFORNIA

PROGRESS LOG

| | | | |
|---|---|---|---|
| 0 | 08/09/22 | ISSUED TO CLIENT | CK |
| A | 06/22/22 | ISSUED FOR REVIEW | CK |

SHEET NUMBER: FRP2.0

PROGRESS: 0

DRAWING DATE: August 10, 2022

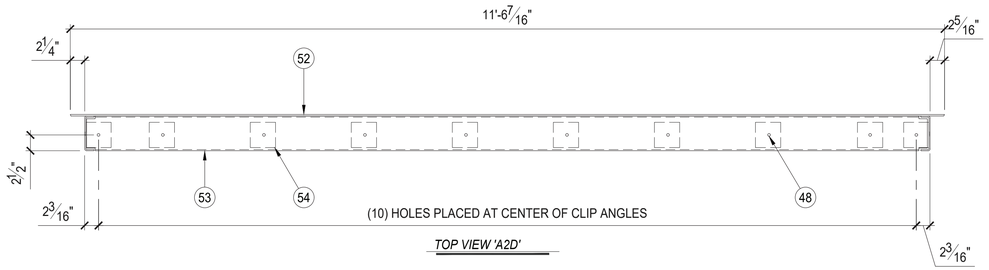


TOP VIEW 'A2D'

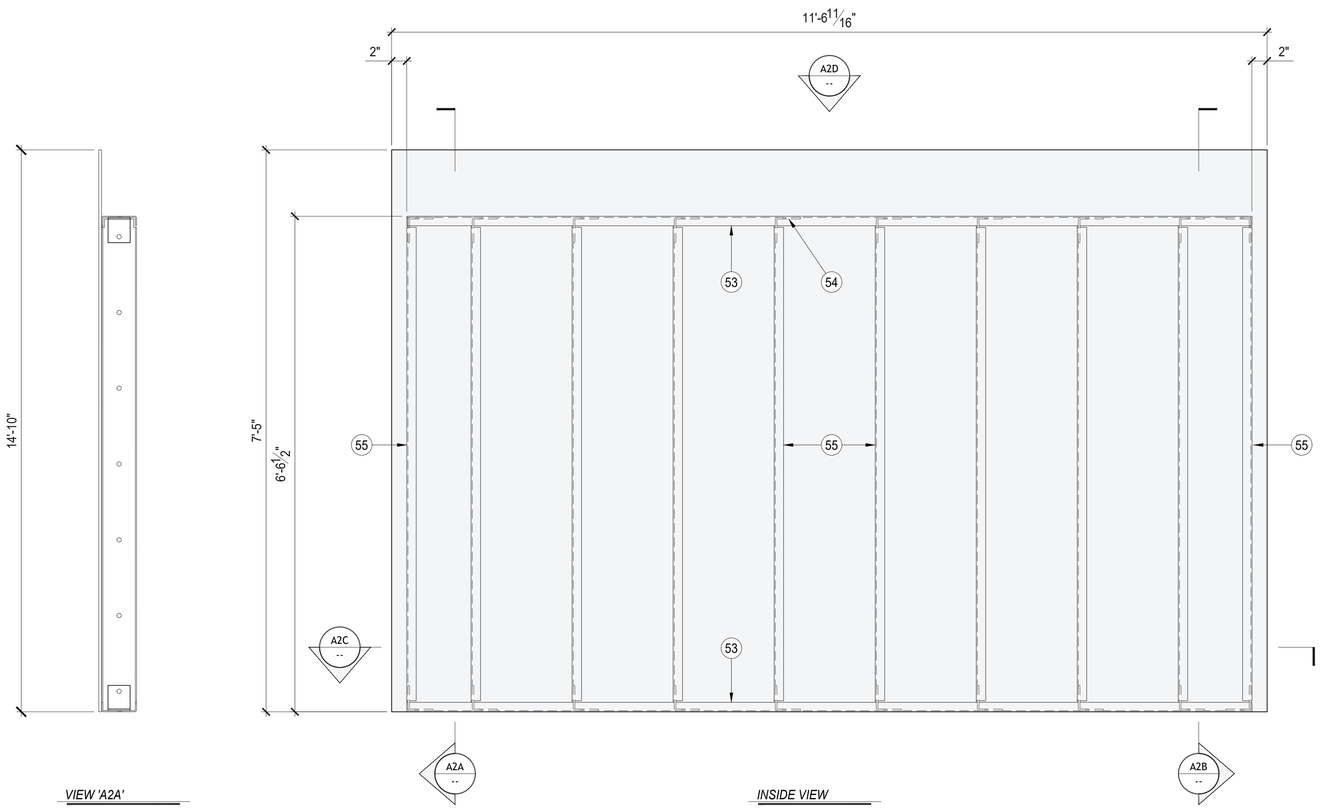


VIEW 'A2A'

INSIDE VIEW

VIEW 'A2B'

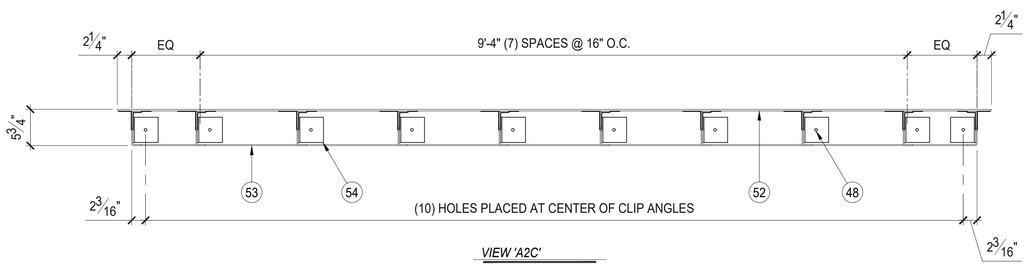


VIEW 'A2C'

(1) THUS

1 FRP PANEL 'A2'

SCALE: 1" = 1'-0"

## KEY NOTES

| | | | |
|---|---|---|---|
| 46 | 2"Ø ACCESS HOLE | MARK | DESCRIPTION |
| 47 | 3/8" FRP SPACER | 1 | (E) METAL FRAMED SOFFIT/ROTUNDA |
| 48 | 5/16"Ø HOLE | 2 | (E) INTERIOR ATRIUM SPACE AT SECOND FLOOR |
| 49 | 2 WRAP FRP BOND | 3 | (E) W12x26 FRAMING |
| 50 | FRP SHEATHING/PANEL SEAM | 4 | (E) HSS 5x5x1/4" COLUMN BELOW |
| 51 | BUILT UP FRP SCREEN PANEL | 5 | (E) 2x12 JOISTS @ 24" O.C. |
| 52 | 3/8" CARBONCORE HONEYCOMB SKIN | 6 | (E) FRAMING TO REMAIN |
| 53 | FRP C5 1/2"x 1 1/2"x 1/4" (PLATE) | 7 | TEMPORARY SHORING 2x6 STUDS @ 16" O.C & 2x6 PLATES. |
| 54 | FRP ∠4x4x5/16" x 4" LONG CLIP ANGLE | 8 | 4x10 DF |
| 55 | FRP C5 1/2"x 1 1/2"x 1/4" (STUD) | 9 | 2x10 DF @ 16" O.C. |
| 56 | NOT USED | 10 | 2x6 DF STUDS @ 16" O.C. |
| 57 | 5/8" FIBREBOLT | 11 | (2) 2x6 HEADER @ VENT OPENINGS |
| 58 | FRP ∠4x4x5/16" | 12 | 2x6 BLOCKING |
| 59 | FRP 3 1/2" x 5 1/2" x 1/4" TUBE POST AT TRUSS BEARING | 13 | (2) 2x6 PLATE |
| 60 | EFIS FINISH TO MATCH EXISTING | 14 | 3/4" PLYWOOD CAT WALK SHEATHING |
| 61 | 5/8" FIBREBOLT | 15 | 3/4" PLYWOOD ROOF SHEATHING |
| 62 | FRP ∠4x4x5/16" | 16 | 3/4" PLYWOOD WALL SHEATHING AT EQUIPMENT MOUNTING LOCATION |
| 63 | 11/16"Ø HOLE | 17 | FINISH INTERIOR TO MATCH EXISTING |
| 64 | CLOSED CELL EXPANSIVE FOAM, FILL AND TRIM FLUSH | 18 | 4x6 POST AT TRUSS BEARING |
| 65 | GUSSET PLATE GP1 | 19 | 600S162-54 (6" 16 GA STUD) |
| 66 | GUSSET PLATE GP2 | 20 | 600S162-54 (6" 16 GA JOIST) |
| 67 | GUSSET PLATE GP3 | 21 | 600T250-97 (6" 16 GA TRACK) |
| 68 | 3/8" FRP PLATE | 22 | 1/4"x 1" TEK SCREW |
| 69 | 11/16"Ø HOLE FIELD DRILL | 23 | 5/8"Ø A325 BOLT IN 11/16" Ø HOLE |
| 70 | FRP 4" x 1/4" SQ TUBE | 24 | ∠6x4x 3/8" |
| 71 | FRP ∠3x3x1/4" | 25 | ANTENNA/EQUIPMENT BY OTHERS |
| 72 | 5/8"Ø ALL-THREAD THRU-BOLT | 26 | Ø2.375" O.D. SCH 40 PIPE |
| 73 | 2x10 DF BACKER PLANK | 27 | 3/8"Ø U-BOLT BOLT |
| 74 | 1/2" NEOPRENE PAD | 28 | 3/8" A36 PLATE |
| 75 | NOT USED | 29 | SKYLIGHT BY OTHERS |
| 76 | (E) T.S. 3x3x1/4" @ 48" O.C | 30 | 22 GA STANDING SEAM ROOFING TO MATCH EXISTING |
| 77 | (E) PARAPET | 31 | 22 GA HIP COVER TO MATCH EXISTING |
| 78 | (E) SCREEN WALL | 32 | SIMPSON LSSR210Z SLOPED SKEWED HANGER |
| 79 | (E) ROOF | 33 | SIMPSON H1 HURRICANE TIE |
| 80 | 5/8"Ø A307 BOLT | 34 | SIMPSON A34 FRAMING ANGLE |
| 81 | 1/2" A36 PLATE | 35 | SIMPSON HU210 (SLOPED) |
| 82 | SIMPSON H2.5A | 36 | PLACE STUDS AS JOISTS OCCUR FOR SOFFIT SUSPENSION |
| 83 | 2x SOLID BLOCKING | 37 | SIMPSON ECC046 |
| 84 | (E) 4X PLATE/NAILER | 38 | SIMPSON ECC046 (MODIFIED) |
| 85 | (E) 3/4"Ø THREADED STUD @ 24" O.C. | 39 | 3/8" MIN STRUCTURAL SHEATHING AT EXTERIOR |
| 86 | SIMPSON H2.5A STUD-PLATE TIE @ 48" O.C. MAX. & AS SHOWN | 40 | VENT PER OWNER |
| 87 | SIMPSON RSP4 STUD-PLATE TIE, TYP AS SHOWN | 41 | 600S162-54 (6" 16 GA STUD) BRIDGING AT TOP OF WALL |
| 88 | 4X12 DF RIDGE BEAM | 42 | SIMPSON H2.5A HURRICANE TIE |
| 89 | 8d NAIL AT 12" O.C. FIELD 6" O.C. ALL SUPPORTED EDGES | 43 | #10 x 1 1/4" SCREW @ 6" O.C. ALL SUPPORTED EDGES & 12" O.C. FIELD |
| 90 | 16d NAIL @ 18" O.C. ALTERNATE LOCATIONS | 44 | DB 2x6 LAMINATED (GLUED) D.F. BEAM @ FRP "WINDOW" |
| 91 | SIMPSON CBT8200 WAFER HEAD SCREW OR EQUAL | 45 | 2x SUB FACIA |

at&t

LARSON
A valmont COMPANY
1501 South Euclid Avenue Tucson, AZ 85713
(520) 294-3900
www.valmontlarson.com

LARSON JOB #: A545094

ISE Incorporated
Structural Engineers
P.O. BOX 50039
Phoenix, Arizona 85076
PHONE: 602-403-8614
www.ise-inc.biz

ISE JOB #: 17887

# KIRKWOOD PLAZA SHOPPING CENTER ROOFTOP ANTENNA ENCLOSURE at&t NO: CCL01280

## FRP PANEL 'A2' & DETAILS

1630 W. CAMPBELL AVE, CAMPBELL, CA 95008
LARAMIE COUNTY, LAT: 37° 17' 6.27" N, LONG: -121° 58' 47.2836" W


THIS DESIGN DRAWING IS PROPRIETARY & CONFIDENTIAL
THE INFORMATION IN THIS DRAWING IS THE SOLE PROPERTY OF LARSON. ANY REPRODUCTION, MODIFICATION, OR MANUFACTURING IN PART, OR AS A WHOLE, WITHOUT THE WRITTEN PERMISSION OF LARSON IS PROHIBITED.


REGISTERED PROFESSIONAL ENGINEER
GLEN VOUNTAS
NO. 67146
Aug 10, 2022
CIVIL
STATE OF CALIFORNIA

PROGRESS LOG

| | | | |
|---|---|---|---|
| 0 | 08/09/22 | ISSUED TO CLIENT | CK |
| A | 06/22/22 | ISSUED FOR REVIEW | CK |

SHEET NUMBER: FRP3.0

PROGRESS: 0

DRAWING DATE: August 10, 2022

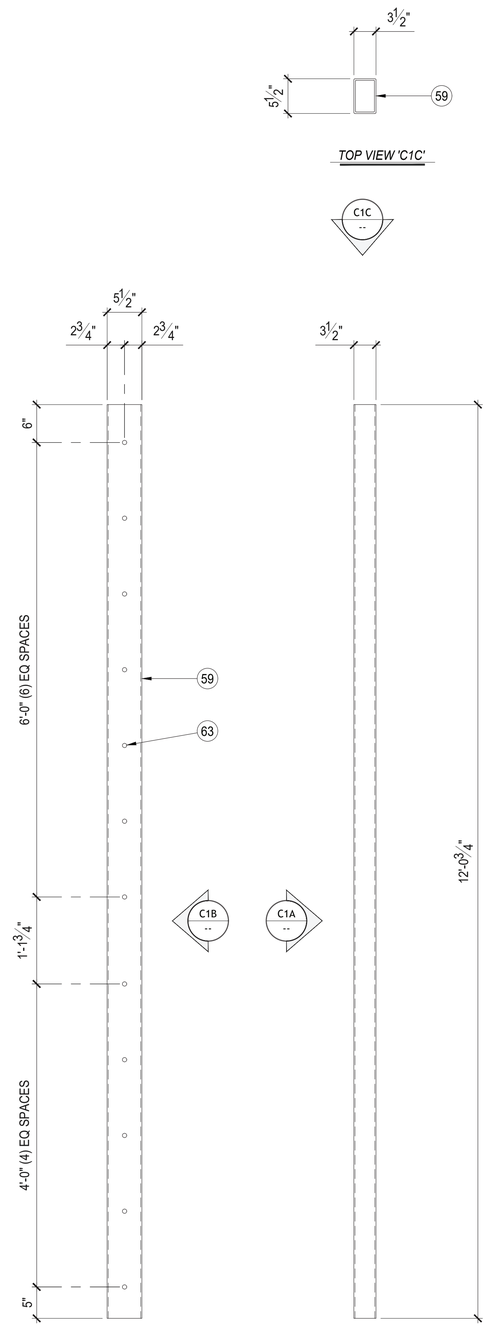


(2) THUS

2 | FRP POST | SCALE: 1" = 1'-0"

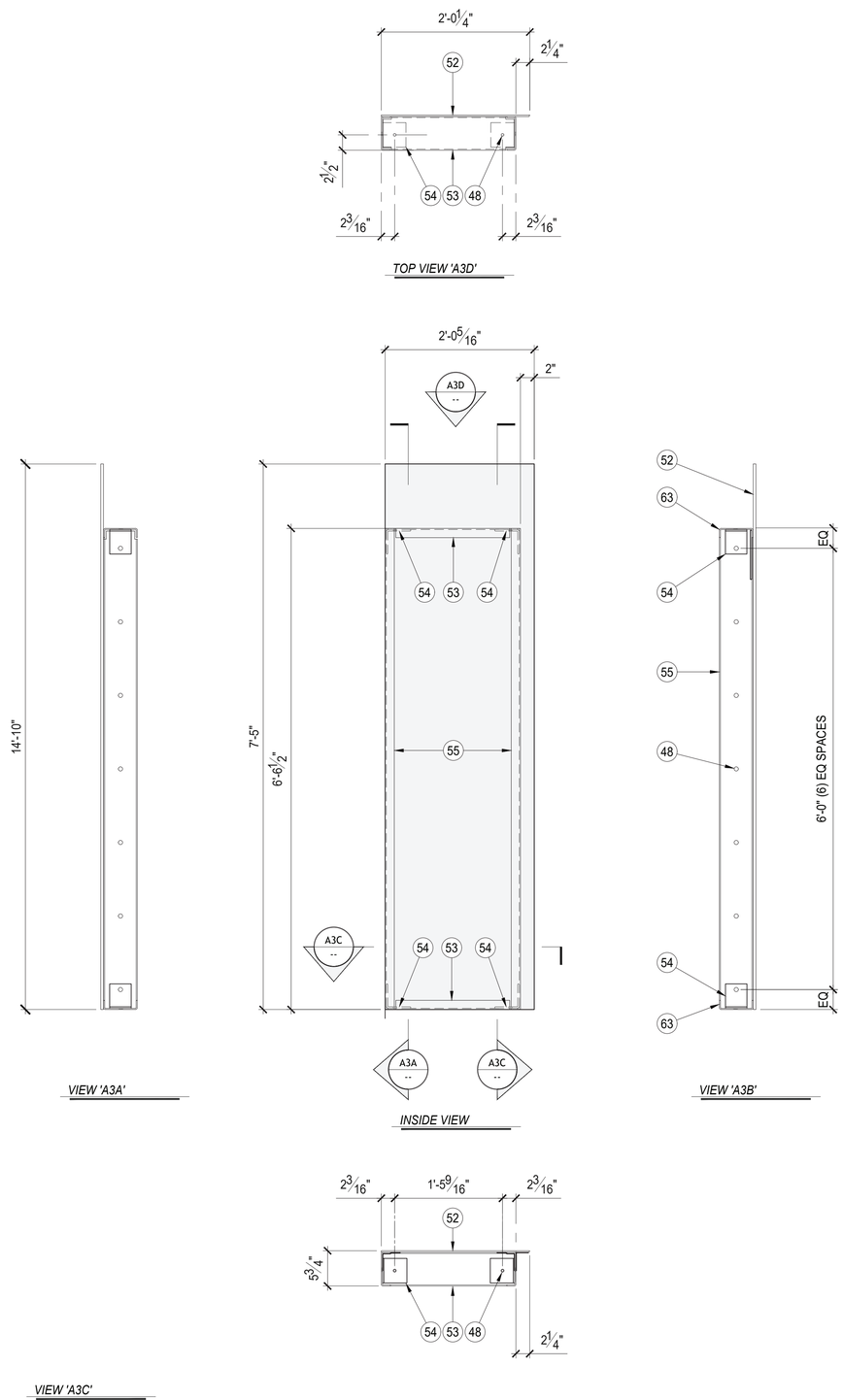


(2) THUS
(2) MIRRORED

1 | FRP PANEL 'A3' | SCALE: 1" = 1'-0"

## KEY NOTES

| | | | |
|---|---|---|---|
| 46 | 2"Ø ACCESS HOLE | MARK | DESCRIPTION |
| 47 | 3/8" FRP SPACER | 1 | (E) METAL FRAMED SOFFIT/ROTUNDA |
| 48 | 5/16"Ø HOLE | 2 | (E) INTERIOR ATRIUM SPACE AT SECOND FLOOR |
| 49 | 2 WRAP FRP BOND | 3 | (E) W12x26 FRAMING |
| 50 | FRP SHEATHING/PANEL SEAM | 4 | (E) HSS 5x5x1/4" COLUMN BELOW |
| 51 | BUILT UP FRP SCREEN PANEL | 5 | (E) 2x12 JOISTS @ 24" O.C. |
| 52 | 3/8" CARBONCORE HONEYCOMB SKIN | 6 | (E) FRAMING TO REMAIN |
| 53 | FRP C5 1/2"x 1 1/2"x 1/4" (PLATE) | 7 | TEMPORARY SHORING 2x6 STUDS @ 16" O.C & 2x6 PLATES. |
| 54 | FRP ∠4x4x5/16" x 4" LONG CLIP ANGLE | 8 | 4x10 DF |
| 55 | FRP C5 1/2"x 1 1/2"x 1/4" (STUD) | 9 | 2x10 DF @ 16" O.C. |
| 56 | NOT USED | 10 | 2x6 DF STUDS @ 16" O.C. |
| 57 | 5/8" FIBREBOLT | 11 | (2) 2x6 HEADER @ VENT OPENINGS |
| 58 | FRP ∠4x4x5/16" | 12 | 2x6 BLOCKING |
| 59 | FRP 3 1/2" x 5 1/2" x 1/4" TUBE POST AT TRUSS BEARING | 13 | (2) 2x6 PLATE |
| 60 | EFIS FINISH TO MATCH EXISTING | 14 | 3/4" PLYWOOD CAT WALK SHEATHING |
| 61 | 5/8" FIBREBOLT | 15 | 3/4" PLYWOOD ROOF SHEATHING |
| 62 | FRP ∠4x4x5/16" | 16 | 3/4" PLYWOOD WALL SHEATHING AT EQUIPMENT MOUNTING LOCATION |
| 63 | 11/16"Ø HOLE | 17 | FINISH INTERIOR TO MATCH EXISTING |
| 64 | CLOSED CELL EXPANSIVE FOAM, FILL AND TRIM FLUSH | 18 | 4x6 POST AT TRUSS BEARING |
| 65 | GUSSET PLATE GP1 | 19 | 600S162-54 (6" 16 GA STUD) |
| 66 | GUSSET PLATE GP2 | 20 | 600S162-54 (6" 16 GA JOIST) |
| 67 | GUSSET PLATE GP3 | 21 | 600T250-97 (6" 16 GA TRACK) |
| 68 | 3/8" FRP PLATE | 22 | 1/4"x 1" TEK SCREW |
| 69 | 11/16"Ø HOLE FIELD DRILL | 23 | 5/8"Ø A325 BOLT IN 11/16" Ø HOLE |
| 70 | FRP 4" x 1/4" SQ TUBE | 24 | ∠6x4x 3/8" |
| 71 | FRP ∠3x3x1/4" | 25 | ANTENNA/EQUIPMENT BY OTHERS |
| 72 | 5/8"Ø ALL-THREAD THRU-BOLT | 26 | Ø2.375" O.D. SCH 40 PIPE |
| 73 | 2x10 DF BACKER PLANK | 27 | 3/8"Ø U-BOLT BOLT |
| 74 | 1/2" NEOPRENE PAD | 28 | 3/8" A36 PLATE |
| 75 | NOT USED | 29 | SKYLIGHT BY OTHERS |
| 76 | (E) T.S. 3x3x1/4" @ 48" O.C | 30 | 22 GA STANDING SEAM ROOFING TO MATCH EXISTING |
| 77 | (E) PARAPET | 31 | 22 GA HIP COVER TO MATCH EXISTING |
| 78 | (E) SCREEN WALL | 32 | SIMPSON LSSR210Z SLOPED SKEWED HANGER |
| 79 | (E) ROOF | 33 | SIMPSON H1 HURRICANE TIE |
| 80 | 5/8"Ø A307 BOLT | 34 | SIMPSON A34 FRAMING ANGLE |
| 81 | 1/2" A36 PLATE | 35 | SIMPSON HU210 (SLOPED) |
| 82 | SIMPSON H2.5A | 36 | PLACE STUDS AS JOISTS OCCUR FOR SOFFIT SUSPENSION |
| 83 | 2x SOLID BLOCKING | 37 | SIMPSON ECC046 |
| 84 | (E) 4X PLATE/NAILER | 38 | SIMPSON ECC046 (MODIFIED) |
| 85 | (E) 3/4"Ø THREADED STUD @ 24" O.C. | 39 | 3/8" MIN STRUCTURAL SHEATHING AT EXTERIOR |
| 86 | SIMPSON H2.5A STUD-PLATE TIE @ 48" O.C. MAX. & AS SHOWN | 40 | VENT PER OWNER |
| 87 | SIMPSON RSP4 STUD-PLATE TIE, TYP AS SHOWN | 41 | 600S162-54 (6" 16 GA STUD) BRIDGING AT TOP OF WALL |
| 88 | 4X12 DF RIDGE BEAM | 42 | SIMPSON H2.5A HURRICANE TIE |
| 89 | 8d NAIL AT 12" O.C. FIELD 6" O.C. ALL SUPPORTED EDGES | 43 | #10 x 1 1/4" SCREW @ 6" O.C. ALL SUPPORTED EDGES & 12" O.C. FIELD |
| 90 | 16d NAIL @ 18" O.C. ALTERNATE LOCATIONS | 44 | DB 2x6 LAMINATED (GLUED) D.F. BEAM @ FRP "WINDOW" |
| 91 | SIMPSON CBT8200 WAFER HEAD SCREW OR EQUAL | 45 | 2x SUB FACIA |


at&t

LARSON
A valmont COMPANY
1501 South Euclid Avenue Tucson, AZ 85713
(520) 294-3900
www.valmontlarson.com
LARSON JOB #: A545094

ISE Incorporated
Structural Engineers
P.O. BOX 50039
Phoenix, Arizona 85076
PHONE: 602-403-8614
www.ise-inc.biz
ISE JOB #: 17887


# KIRKWOOD PLAZA SHOPPING CENTER
# ROOFTOP ANTENNA ENCLOSURE
# at&t NO: CCL01280
## FRP PANEL 'A3' & POST 'C1'

1630 W. CAMPBELL AVE, CAMPBELL, CA 95008
LARAMIE COUNTY, LAT: 37° 17' 6.27" N, LONG: -121° 58' 47.2836" W


THIS DESIGN DRAWING IS PROPRIETARY & CONFIDENTIAL
THE INFORMATION IN THIS DRAWING IS THE SOLE PROPERTY OF LARSON. ANY REPRODUCTION, MODIFICATION, OR MANUFACTURING IN PART, OR AS A WHOLE, WITHOUT THE WRITTEN PERMISSION OF LARSON IS PROHIBITED.


REGISTERED PROFESSIONAL ENGINEER
GLEN VOUNTAS
NO. 67146
Aug 10, 2022
CIVIL
STATE OF CALIFORNIA

PROGRESS LOG

| | | | |
|---|---|---|---|
| 0 | 08/09/22 | ISSUED TO CLIENT | CK |
| A | 06/22/22 | ISSUED FOR REVIEW | CK |

SHEET NUMBER: FRP4.0
PROGRESS: 0
DRAWING DATE: August 10, 2022

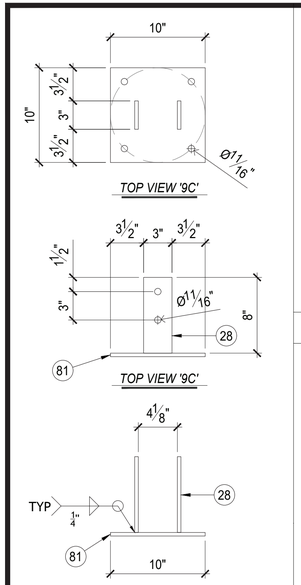


8 BASE SHOE — SCALE: 1 ½" = 1'-0"

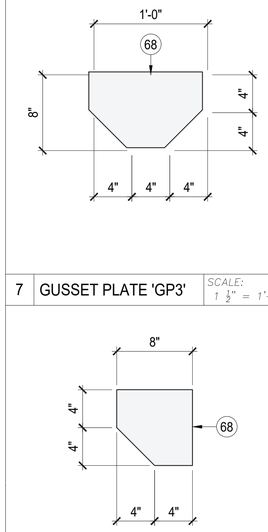


7 GUSSET PLATE 'GP3' — SCALE: 1 ½" = 1'-0"

6 GUSSET PLATE 'GP2' — SCALE: 1 ½" = 1'-0"

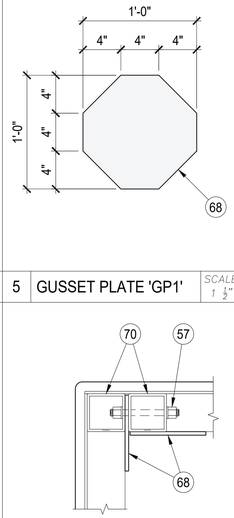


5 GUSSET PLATE 'GP1' — SCALE: 1 ½" = 1'-0"

4 CORNER DETAIL — SCALE: 1 1/2" = 1'-0"

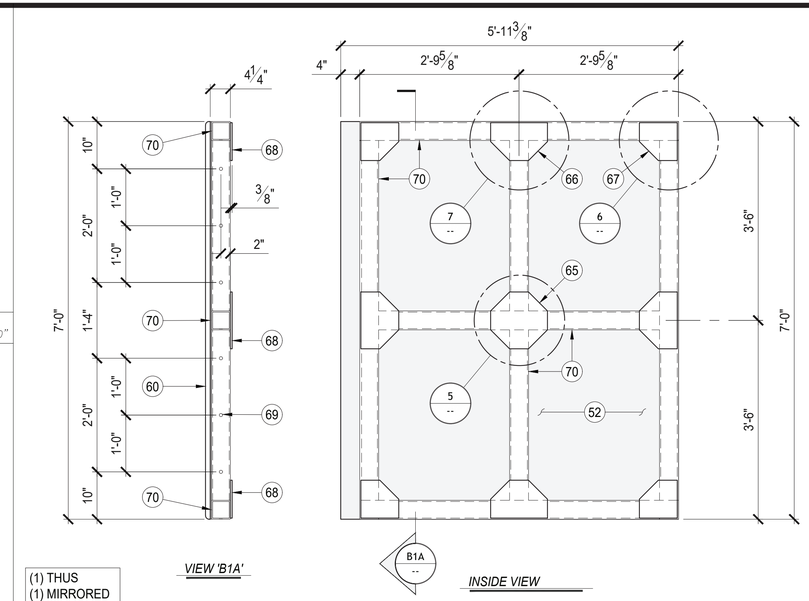


(1) THUS
(1) MIRRORED

2 PANEL 'B1' — SCALE: 3/4" = 1'-0"

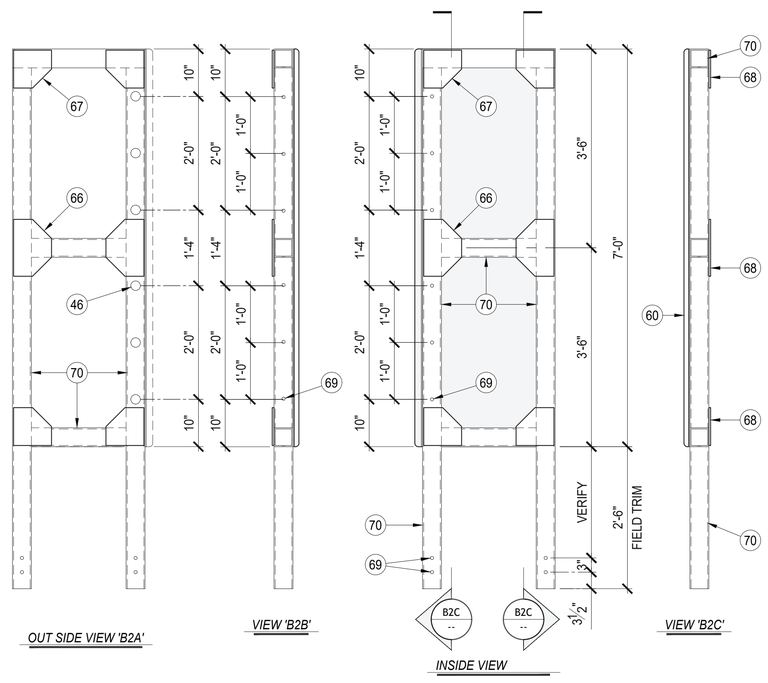


(1) THUS
(1) MIRRORED

3 FRP PANEL 'B2' — SCALE: 3/4" = 1'-0"

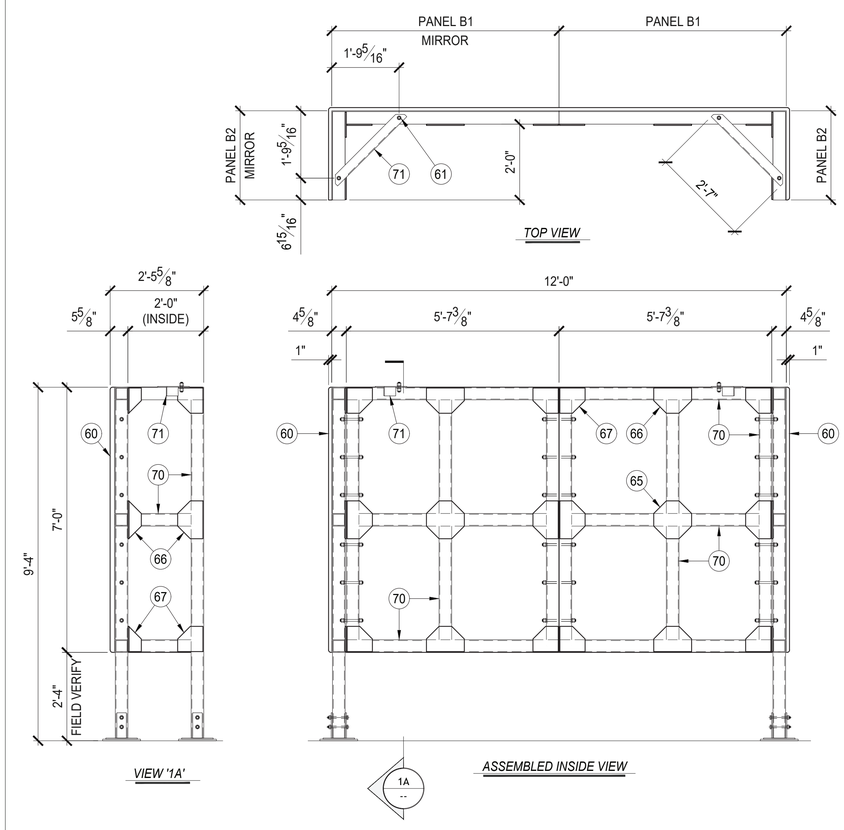


1 SECTOR B ASSEMBLY — SCALE: 1/2" = 1'-0"

## KEY NOTES

| | | MARK | DESCRIPTION |
|---|---|---|---|
| 46 | 2"Ø ACCESS HOLE | 1 | (E) METAL FRAMED SOFFIT/ROTUNDA |
| 47 | ⅜" FRP SPACER | 2 | (E) INTERIOR ATRIUM SPACE AT SECOND FLOOR |
| 48 | 5/16"Ø HOLE | 3 | (E) W12x26 FRAMING |
| 49 | 2 WRAP FRP BOND | 4 | (E) HSS 5x5x¼" COLUMN BELOW |
| 50 | FRP SHEATHING/PANEL SEAM | 5 | (E) 2x12 JOISTS @ 24" O.C. |
| 51 | BUILT UP FRP SCREEN PANEL | 6 | (E) FRAMING TO REMAIN |
| 52 | ⅜" CARBONCORE HONEYCOMB SKIN | 7 | TEMPORARY SHORING 2x6 STUDS @ 16" O.C & 2x6 PLATES. |
| 53 | FRP C5 ½"x 1 ½"x ¼" (PLATE) | 8 | 4x10 DF |
| 54 | FRP ∠4x4x5/16" x 4" LONG CLIP ANGLE | 9 | 2x10 DF @ 16" O.C. |
| 55 | FRP C5 ½"x 1 ½"x ¼" (STUD) | 10 | 2x6 DF STUDS @ 16" O.C. |
| 56 | NOT USED | 11 | (2) 2x6 HEADER @ VENT OPENINGS |
| 57 | ⅝" FIBREBOLT | 12 | 2x6 BLOCKING |
| 58 | FRP ∠4x4x5/16" | 13 | (2) 2x6 PLATE |
| 59 | FRP 3 ½" x 5 ½" x ¼" TUBE POST AT TRUSS BEARING | 14 | ¾" PLYWOOD CAT WALK SHEATHING |
| 60 | EFIS FINISH TO MATCH EXISTING | 15 | ¾" PLYWOOD ROOF SHEATHING |
| 61 | ⅝" FIBREBOLT | 16 | ¾" PLYWOOD WALL SHEATHING AT EQUIPMENT MOUNTING LOCATION |
| 62 | FRP ∠4x4x5/16" | 17 | FINISH INTERIOR TO MATCH EXISTING |
| 63 | 11/16"Ø HOLE | 18 | 4x6 POST AT TRUSS BEARING |
| 64 | CLOSED CELL EXPANSIVE FOAM, FILL AND TRIM FLUSH | 19 | 600S162-54 (6" 16 GA STUD) |
| 65 | GUSSET PLATE GP1 | 20 | 600S162-54 (6" 16 GA JOIST) |
| 66 | GUSSET PLATE GP2 | 21 | 600T250-97 (6" 16 GA TRACK) |
| 67 | GUSSET PLATE GP3 | 22 | ¼"x 1" TEK SCREW |
| 68 | ⅜" FRP PLATE | 23 | ⅝"Ø A325 BOLT IN 11/16" Ø HOLE |
| 69 | 11/16"Ø HOLE FIELD DRILL | 24 | ∠6x4x ⅜" |
| 70 | FRP 4" x ¼" SQ TUBE | 25 | ANTENNA/EQUIPMENT BY OTHERS |
| 71 | FRP ∠3x3x¼" | 26 | Ø2.375" O.D. SCH 40 PIPE |
| 72 | ⅝"Ø ALL-THREAD THRU-BOLT | 27 | ⅜"Ø U-BOLT BOLT |
| 73 | 2x10 DF BACKER PLANK | 28 | ⅜" A36 PLATE |
| 74 | ½" NEOPRENE PAD | 29 | SKYLIGHT BY OTHERS |
| 75 | NOT USED | 30 | 22 GA STANDING SEAM ROOFING TO MATCH EXISTING |
| 76 | (E) T.S. 3x3x¼" @ 48" O.C | 31 | 22 GA HIP COVER TO MATCH EXISTING |
| 77 | (E) PARAPET | 32 | SIMPSON LSSR210Z SLOPED SKEWED HANGER |
| 78 | (E) SCREEN WALL | 33 | SIMPSON H1 HURRICANE TIE |
| 79 | (E) ROOF | 34 | SIMPSON A34 FRAMING ANGLE |
| 80 | ⅝"Ø A307 BOLT | 35 | SIMPSON HU210 (SLOPED) |
| 81 | ½" A36 PLATE | 36 | PLACE STUDS AS JOISTS OCCUR FOR SOFFIT SUSPENSION |
| 82 | SIMPSON H2.5A | 37 | SIMPSON ECC046 |
| 83 | 2x SOLID BLOCKING | 38 | SIMPSON ECC046 (MODIFIED) |
| 84 | (E) 4X PLATE/NAILER | 39 | ⅜" MIN STRUCTURAL SHEATHING AT EXTERIOR |
| 85 | (E) ¾"Ø THREADED STUD @ 24" O.C. | 40 | VENT PER OWNER |
| 86 | SIMPSON H2.5A STUD-PLATE TIE @ 48" O.C. MAX. & AS SHOWN | 41 | 600S162-54 (6" 16 GA STUD) BRIDGING AT TOP OF WALL |
| 87 | SIMPSON RSP4 STUD-PLATE TIE, TYP AS SHOWN | 42 | SIMPSON H2.5A HURRICANE TIE |
| 88 | 4X12 DF RIDGE BEAM | 43 | #10 x 1 ½" SCREW @ 6" O.C. ALL SUPPORTED EDGES & 12" O.C. FIELD |
| 89 | 8d NAIL AT 12" O.C. FIELD 6" O.C. ALL SUPPORTED EDGES | 44 | DB 2x6 LAMINATED (GLUED) D.F. BEAM @ FRP "WINDOW" |
| 90 | 16d NAIL @ 18" O.C. ALTERNATE LOCATIONS | 45 | 2x SUB FACIA |
| 91 | SIMPSON CBT8200 WAFER HEAD SCREW OR EQUAL | | |


at&t

LARSON
A valmont COMPANY
1501 South Euclid Avenue Tucson, AZ 85713
(520) 294-3900
www.valmontlarson.com

LARSON JOB #: A545094

ISE Incorporated
Structural Engineers
P.O. BOX 50039
Phoenix, Arizona 85076
PHONE: 602-403-8614
www.ise-inc.biz

ISE JOB #: 17887


# KIRKWOOD PLAZA SHOPPING CENTER ROOFTOP ANTENNA ENCLOSURE

## at&t NO: CCL01280

## SECTOR 'B' ENCLOSURE ASSEMBLY & FRP PANEL 'B1' & 'B2'

1630 W. CAMPBELL AVE, CAMPBELL, CA 95008
LARAMIE COUNTY, LAT: 37° 17' 6.27" N, LONG: -121° 58' 47.2836" W


THIS DESIGN DRAWING IS PROPRIETARY & CONFIDENTIAL
THE INFORMATION IN THIS DRAWING IS THE SOLE PROPERTY OF LARSON. ANY REPRODUCTION, MODIFICATION, OR MANUFACTURING IN PART, OR AS A WHOLE, WITHOUT THE WRITTEN PERMISSION OF LARSON IS PROHIBITED.


REGISTERED PROFESSIONAL ENGINEER
GARY W. HUNTER
NO. 67146
Aug 10, 2022
CIVIL
STATE OF CALIFORNIA

PROGRESS LOG

| | | | |
|---|---|---|---|
| 0 | 08/09/22 | ISSUED TO CLIENT | CK |
| A | 06/22/22 | ISSUED FOR REVIEW | CK |

SHEET NUMBER: FRP5.0

PROGRESS: 0

DRAWING DATE: August 10, 2022